New DPX³

Precise protection and measurement

MOULDED CASE CIRCUIT BREAKERS FROM 16 TO 250 A

legrand®

The new DPX³ range of MCCBs is one of a series of Legrand solutions for providing improved protection and control of all your low voltage installations.

DPX³ is the ideal solution if you are looking for reliable, safe and precise protection for people and property, good continuity of service, easy installation, freedom of layout and easy maintenance and adjustment. The technological innovations incorporated in the product provide you with improved remote control and easy access to the electrical parameters or the energy consumption in your installation.

In this document you will learn about the numerous advantages of the DPX³/DPX range, which is suitable for all your requirements in terms of selecting, designing or creating electrical panels, investment, or operating the installation.

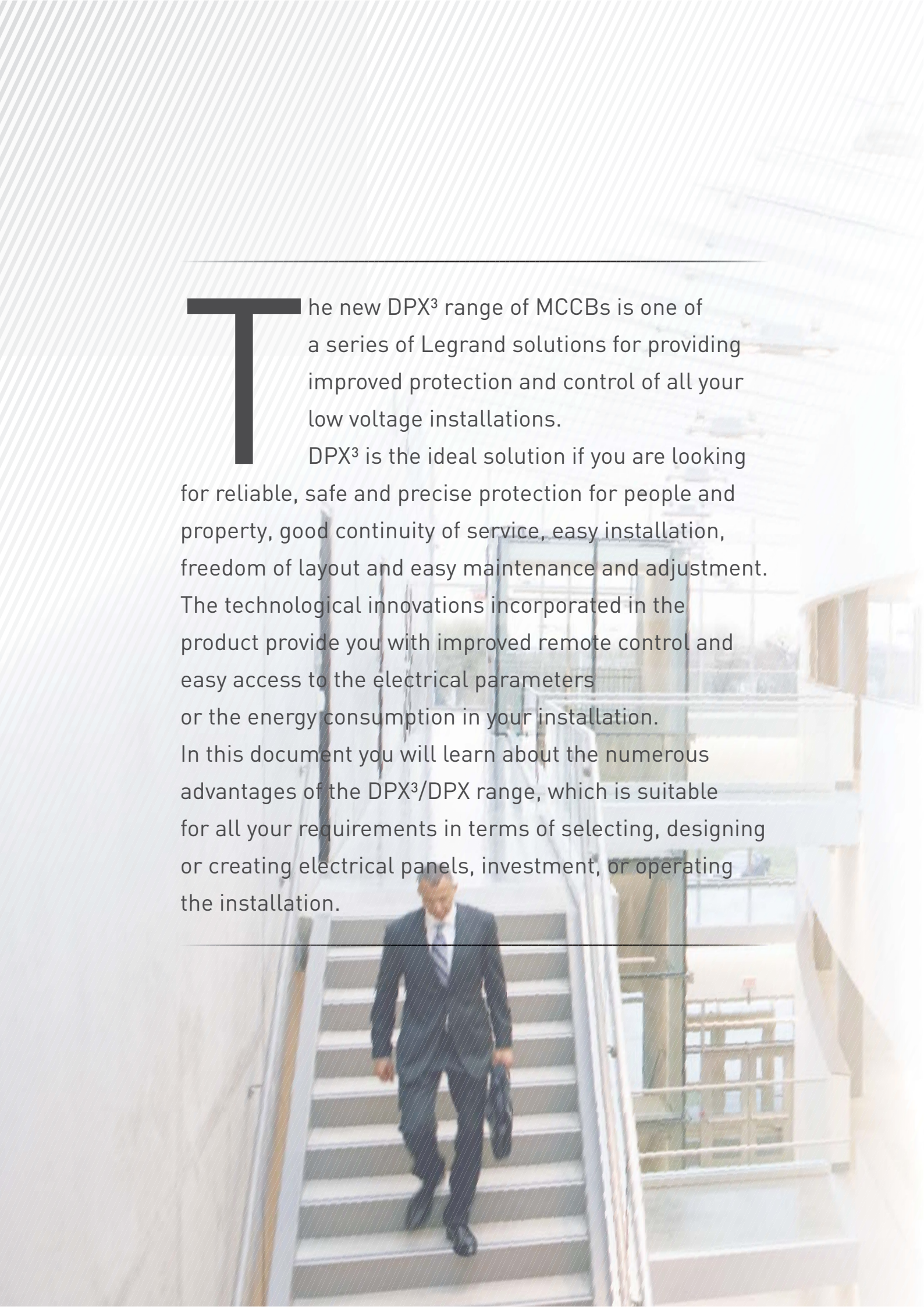

Pages 02-09

WIDE CHOICE, HIGH PERFORMANCE AND SAFETY

02-03 | A complete range for all requirements from 16 to 1 600 A

04-05 | DPX³, an optimised range

06-07 | Reliable and precise protection

08-09 | Continuity of service

Pages 10-13

NEW FUNCTIONS SIMPLIFYING THE USE

10-11 | Easy operation and maintenance

12-13 | A complete range of accessories

Pages 14-23

SIMPLE AND QUICK INSTALLATION

14-15 | Installation of auxiliaries and connection

16-17 | Reliable and safe distribution system

18-19 | Perfect integration in XL³ enclosures

20-21 | The XL³ range: the answer to all your requirements

22-23 | Legrand services and commitments

Pages 24-71

CATALOGUE PAGES

24-31 | DPX³ 160 and DPX³ 250

32-33 | DPX³ 160 and DPX³ 250 accessories

34-45 | DPX 250, DPX 630 and DPX 1600

46-51 | XL³ accessories selection chart

52-71 | DPX³ and DPX technical characteristics

A COMPLETE RANGE FOR ALL YOUR REQUIREMENTS FROM 16 TO 1 600 A

DPX³/DPX: 5 sizes of moulded case circuit breakers

Breaking capacity ranging from 16 to 70 kA.

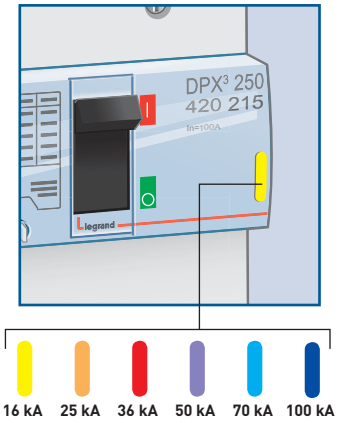

Easy identification of the breaking capacity: colour marking

DPX³ 160

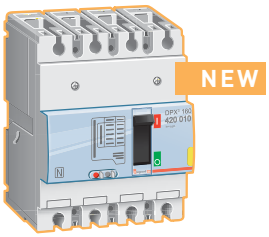

DPX³ 250

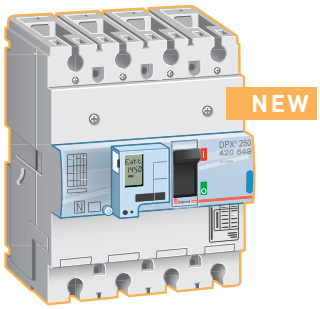

MOUNTING		ON RAIL ⊥⊔ OR ON PLATE				ON RAIL ⊥⊔ OR ON PLATE			
Rated current In	Thermal magnetic release	From 16 to 160 A				From 100 to 250 A			
	Electronic release	-				From 40 to 250 A			
Breaking capacity Icu [1]	380/415 V∿	16 kA	25 kA	36 kA	50 kA	25 kA	36 kA	50 kA	70 kA
	220/240 V∿	25 kA	35 kA	50 kA	65 kA	40 kA	60 kA	100 kA	100 kA
Standard breaking capacity Ics (% Icu)		100 %	100 %	100 %	100 %	100 %	100 %	100 %	100 %
Electronic earth leakage module		Without or integrated				Without or integrated			

(1) EN 60947-2 and IEC 60947-2

DPX 250

DPX 630

DPX 1250/1600

	ON PLATE		ON PLATE		ON PLATE		ON PLATE	
	From 40 to 250 A		From 320 to 630 A		From 800 to 1 250 A		-	
	From 40 to 250 A		From 250 to 630 A		-		From 800 to 1 600 A	
	36 kA	70 kA	36 kA	70 kA	36 kA	70 kA	50 kA	70 kA
	60 kA	100 kA	60 kA	100 kA	80 kA	100 kA	80 kA	100 kA
	100 %	75 %	100 %	75 %	100 %	75 %	100 %	75 %
	Without or downstream		Without or downstream		Without or residual current relay and coils			

DPX³, AN OPTIMISED RANGE

The same depth for all circuit breakers from 16 to 250 A

With 2 new ratings (80 and 200 A), a wide range of versions, characteristics and innovative functions, Legrand has an even more comprehensive range with just two sizes of circuit breakers.

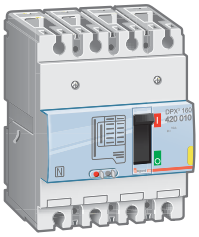

Thermal-magnetic DPX³ 160

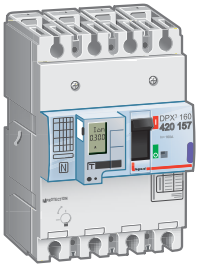

Thermal-magnetic DPX³ 160
with residual current protection

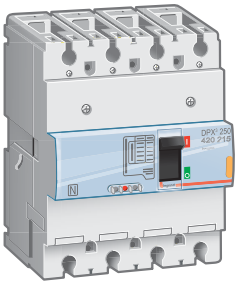

Thermal-magnetic DPX³ 250

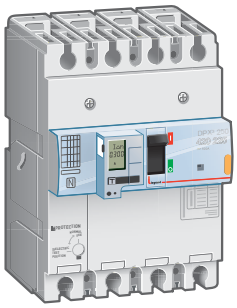

Thermal-magnetic DPX³ 250
with residual current protection

A complete range satisfying your requirements

		DPX³ 160								DPX³ 250				
Nominal current In (A)		16	25	40	63	80	100	125	160	40	100	160	200	250
Number of poles	3	✓	✓	✓	✓	✓	✓	✓	✓	✓	✓	✓	✓	✓
	4	✓	✓	✓	✓	✓	✓	✓	✓	✓	✓	✓	✓	✓
Versions	Fixed	✓	✓	✓	✓	✓	✓	✓	✓	✓	✓	✓	✓	✓
	Plug-in	✓	✓	✓	✓	✓	✓	✓	✓	✓	✓	✓	✓	✓
Release	Thermal-magnetic	✓	✓	✓	✓	✓	✓	✓	✓		✓	✓	✓	✓
	Electronic									✓	✓	✓		✓
Options	Residual current protection	✓	✓	✓	✓	✓	✓	✓	✓	✓	✓	✓	✓	✓
	Measurement									✓	✓	✓		✓
	Earth protection									✓	✓	✓		✓
Breaking capacity Icu (kA)	16	✓	✓	✓	✓	✓	✓	✓	✓					
	25	✓	✓	✓	✓	✓	✓	✓	✓	✓	✓	✓	✓	✓
	36	✓	✓	✓	✓	✓	✓	✓	✓	✓	✓	✓	✓	✓
	50	✓	✓	✓	✓	✓	✓	✓	✓	✓	✓	✓	✓	✓
	70									✓	✓	✓	✓	✓

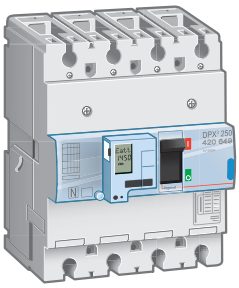

Electronic DPX³ 250

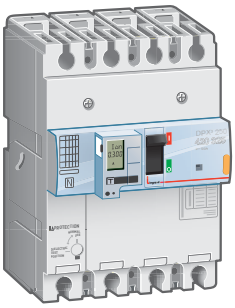

Electronic DPX³ 250
with residual current protection

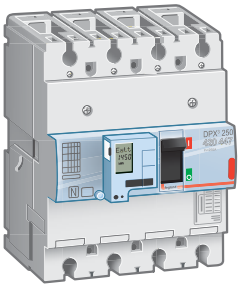

Electronic DPX³ 250
with integrated measuring units

Electronic DPX³ 250
with residual current protection and integrated measuring units

Optimised dimensions

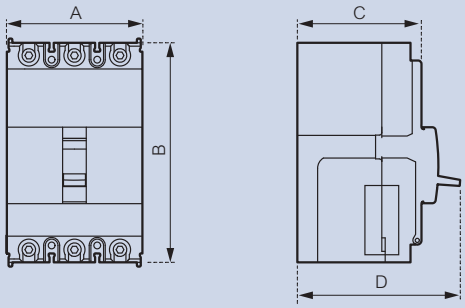

DIMENSIONS (mm)		DPX³ 160	DPX³ 250
A	3P	81	105
	4P	108	140
B	Without RCD	130	165
	With RCD	160	195
C		74	
D		100	

THE SAME DEPTH FOR ALL RATINGS

Optimised integration: devices with different ratings can be used together on the same row.

Interlocking of 2 MCCBs of different ratings.

RELIABLE AND PRECISE PROTECTION

To comply with all requirements for the protection of people and property, the new DPX³ MCCBs and DPX³ RCBOs are available in thermal-magnetic versions from 16 to 250 A and electronic versions from 40 to 250 A.

Thermal-magnetic MCCBs DPX³ 160 and DPX³ 250

The thermal trip threshold Ir on all these devices can be adjusted to provide the best protection against overloads.

On the DPX³ 250 the magnetic trip threshold Ii can also be adjusted, for precise protection against short-circuits.
This threshold is fixed on the DPX³ 160.

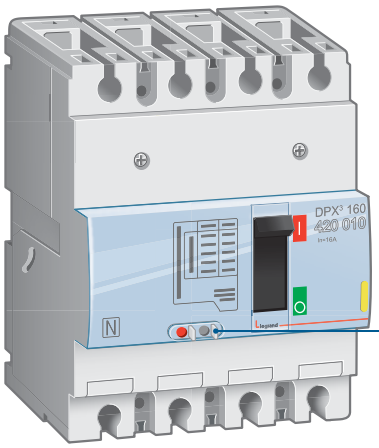

Thermal-magnetic MCCBs are adjusted on the front panel using a screwdriver

THERMAL-MAGNETIC RELEASES	DPX³ 160		DPX³ 250	
Thermal protection against overloads Ir (A)	Adjustable: 0.8 to 1 x In	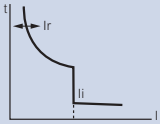	Adjustable: 0.8 to 1 x In	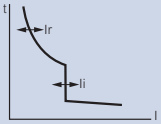
Magnetic protection against short circuits Ii (A)	Fixed 16 A: 400 A 25 A: 400 A 40 to 160A: 10 x In		Adjustable: 5 to 10 x In	

Electronic MCCBs
DPX³ 250

Electronic releases provide very precise adjustment of the trip thresholds Ir and Isd and the response times Tr and Tsd.

On MCCBs with protection against earth faults Isg and Tsg can be adjusted.

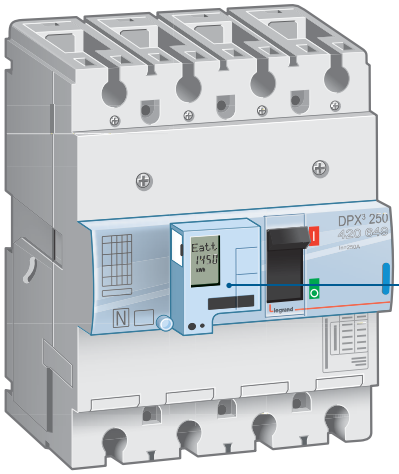

Adjustments are made using the selector switch and are displayed on the LCD screen

ELECTRONIC RELEASES		DPX³ 250		
Long delay protection against overloads	Threshold Ir (A)	Adjustable	0.4 to 1 x In	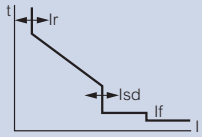
	Response time Tr (s)		3 to 16 s	
Short delay protection against short circuits	Threshold Isd (A)	Adjustable	1.5 to 10 x Ir	
	Response time Tsd (s)		0 to 0.5 s	
Protection against earth faults	Threshold Ig (A)	Adjustable	0.2 to 7 x In	
	Response time Tg (s)		0.1 to 1 s	

RCBOs
DPX³ 160 and DPX³ 250

Precise protection of people is provided on all RCDs (thermal-magnetic and electronic) by an integrated electronic unit. Adjustments are made via an LCD screen.

RESIDUAL CURRENT PROTECTION	DPX³ 160/250
Trip threshold IΔn (A)	0.03 - 0.3 - 1 - 3
Response time Δt (s)	0 - 0.3 - 1 - 3

ADVANTAGES OF THE ELECTRONIC RELEASE:

- RS485 communication function
- Self-diagnostic function
- More precise adjustments
- Event log
- Optional measurement unit.

CONTINUITY OF SERVICE

Selectivity of DMX³, DPX³ and DPX MCCBs

Selectivity consists of coordinating the protection in such a way that a fault on one circuit only trips the protection placed directly upstream of the fault, thus avoiding the rest of the installation being put out of service.

Legrand circuit breakers are the ideal answer for total selectivity, providing 4 types of coordination: current sensing, time, dynamic and logical.

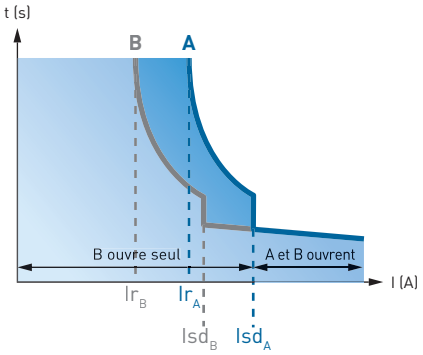

Current sensing selectivity
Choice of the correct rating to ensure selectivity

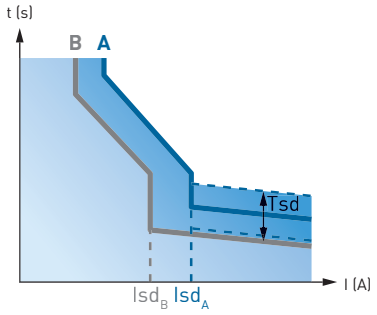

Time selectivity
Choice of the correct setting on a circuit breaker to space out the trips over time

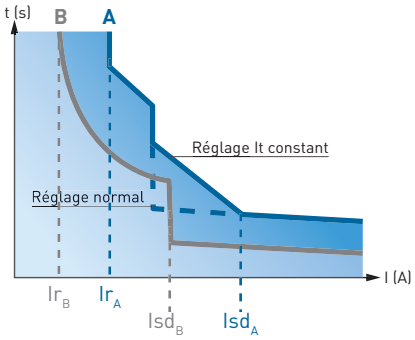

Dynamic selectivity
High and low electronic adjustment of the upstream and downstream circuit breakers

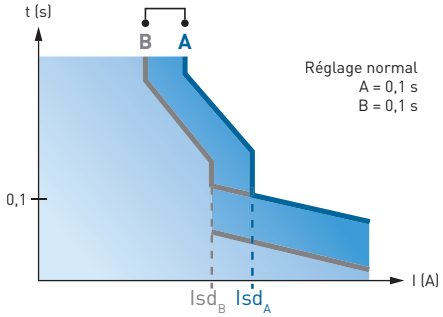

Logical selectivity
Communication between the circuit breakers to adjust the tripping to the actual operating requirements

➜ For more information, please refer to Power Guide 05, "Breaking and protection devices"

DPX³ 160 and 250 supply invertors

Supply inversion switches the power supply of the installation to a backup supply when there is a fault on the main supply.

The DPX³ interlocking device greatly simplifies installing the supply inverter:
- Front mounting
- Compact size
- No adjustments required
- Ability to use a DPX³ 160 and a DPX³ 250 together
- Fixed version rail mounted, enabling installation in small cabinets
- Just 2 catalogue numbers covering all DPX³, whatever the size: one for fixed versions, one for plug-in versions.

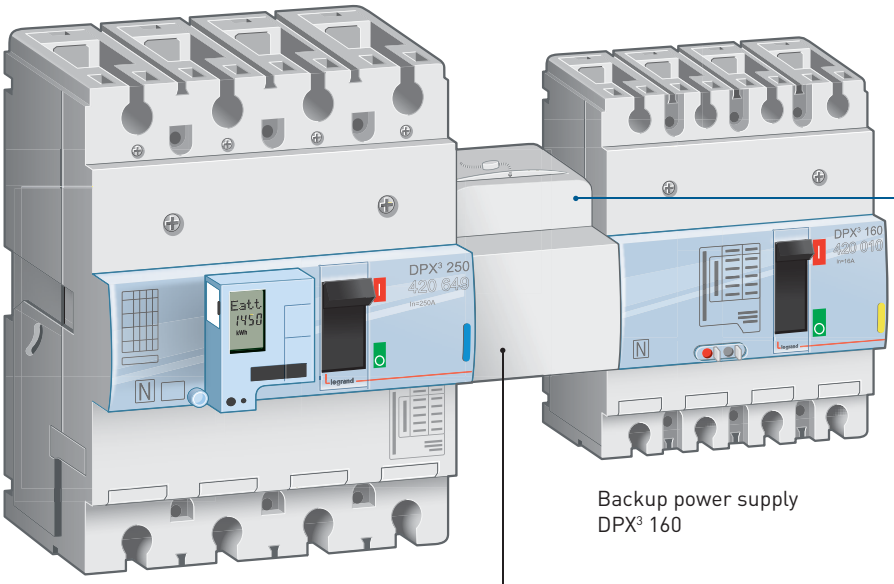

Normal use
DPX³ 250

Interlocking for supply inversion

Backup power supply
DPX³ 160

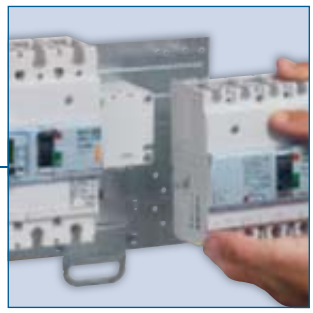

Easy to install: mounting on front panel with no adjustment

MOTORISED SUPPLY INVERSION FOR CONTINUOUS OPERATION

Combined with an automated control unit, supply inversion can be controlled locally or even remotely by supervision.

EASY OPERATION AND MAINTENANCE

Integrated measuring units on electronic DPX³ 250

The new DPX³ 250 electronic MCCBs with integrated measurement functions provide access to the parameters of the installation in a compact unit.

The measured values can be viewed:
- Directly on the electrical panel, on the LCD screen on the front panel of the device
- Remotely using a PC or a smartphone equipped with supervision software, via the RS485 communication interface and the Modbus protocol.

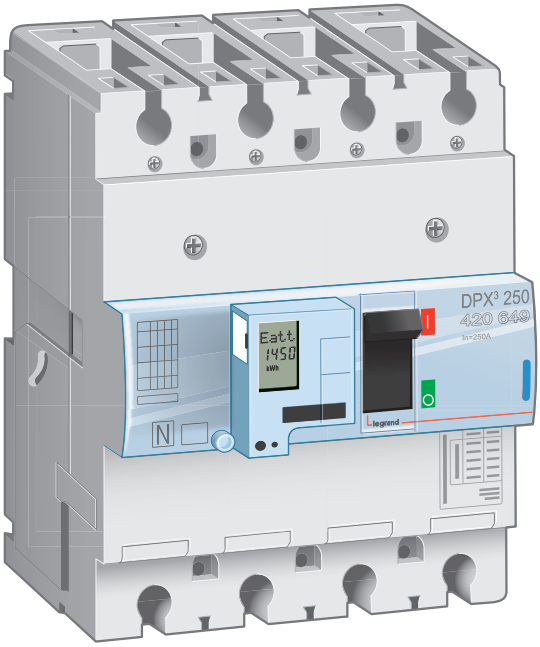

Display of values in real time and logs:
- **Consumption**
- **Current**
- **Voltage**
- **Active/reactive power**
- **Harmonics**
- **Frequency**

DISPLAY, MEASURE, CONTROL

Display of measured values on a PC equipped with supervision software.

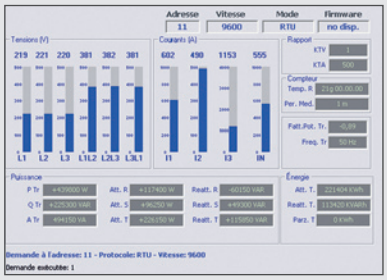

Plug-in DPX³ 160 and DPX³ 250

Replacing a plug-in device only takes a few minutes and can be done without switching off the power supply to the other circuits.

All the devices in the DPX³ range can can be converted to plug-in versions. The bases are supplied with all the necessary components to convert the devices. They are mounted on plates and can be connected via front or rear terminals.

Specific accessories are available as options to ensure the safety of testing and maintenance operations.

With the optional connector the power can be disconnected while the auxiliaries are kept operational for tests

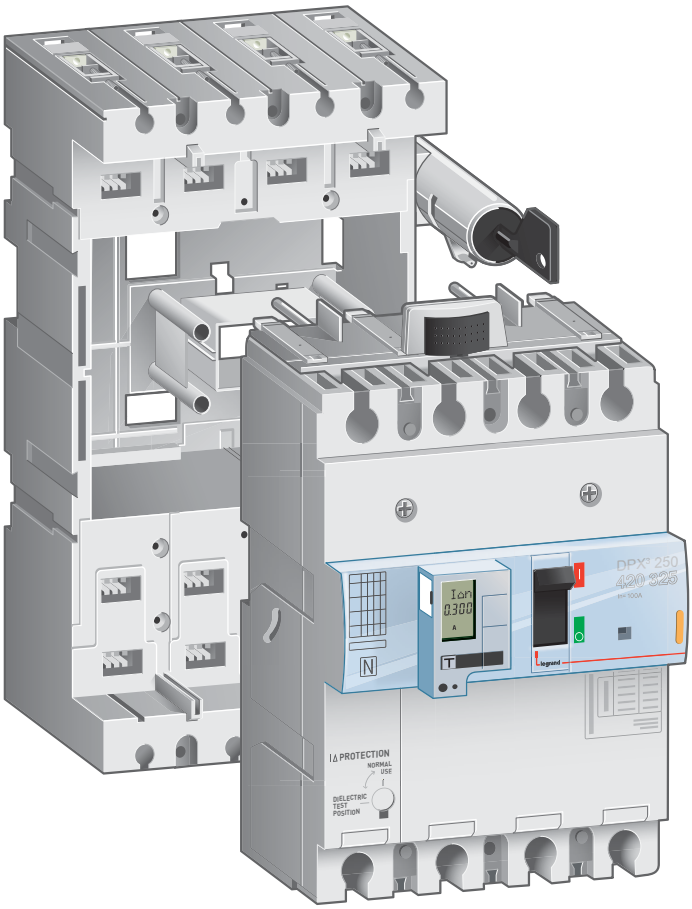

The top and bottom handles enable the device to be extracted easily

Locking via key or padlock prevents the device being switched on, on its base, during maintenance operations

A COMPLETE RANGE OF ACCESSORIES

Motorised control for DPX³ 160 and 250

Motorised controls for the DPX³ 160 and 250 enable devices to be tripped and reset remotely to provide a simple answer to operating requirements.
They are available in just **2 catalogue numbers** for all the DPX³, one with a **side** control and one with a **front** control. They take a wide range of DC and AC supply voltages.

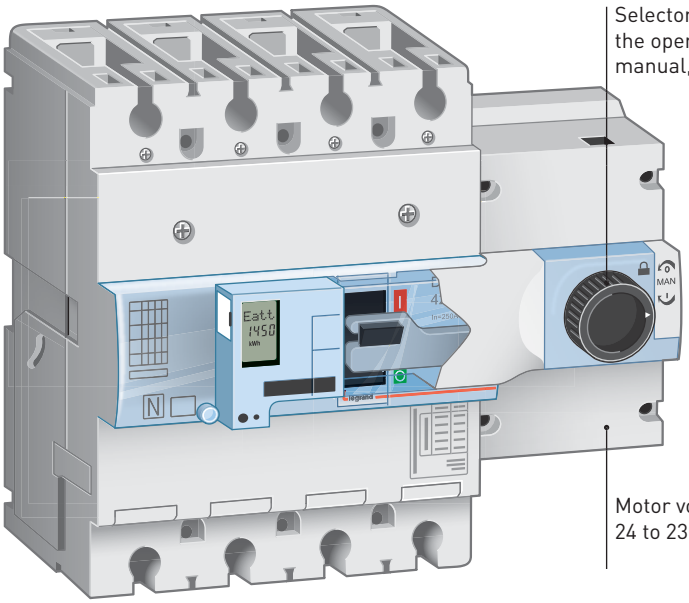

The operating key
is always available for periodic tests or for manual control

The front motorised control
leaves access to the connections and adjustment

The side motorised control
is mounted on the rail beside the DPX³

REMOTE TRIPPING FOR SIMPLIFIED OPERATION:

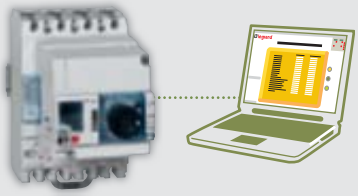

Remote control from a PC equipped with supervision software for load shedding and restoration.

Rotary controls for DPX³ 160 and 250

Direct or remote rotary controls provide **the utmost convenience**.
They can be **locked using padlocks or keys** to ensure the safety of maintenance operations.

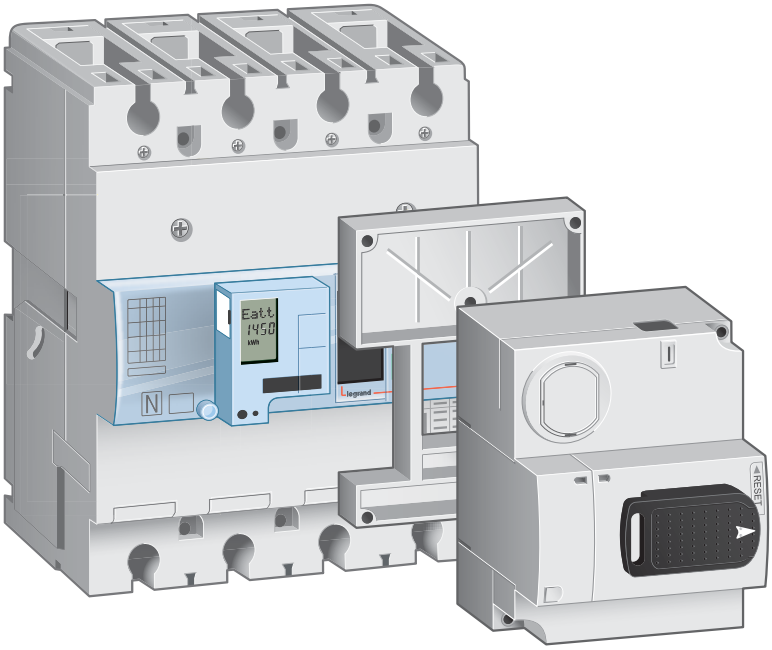

Rotary controls
can take a lock with key

The remote rotary control
enables the control handle to be installed on the door

REMINDER:
The DPX 250, 600 and 1600 keep their own specific accessories:
motorised, rotary and remote controls.

INSTALLATION OF AUXILIARIES AND CONNECTION

Control and signalling auxiliaries for DPX³ 160 and 250

The trip coils enable the opening of the circuit breaker to be controlled via a control circuit (emergency break, electronic control box, remote control).

Auxiliary and fault signal contacts are used to control an auxiliary circuit or to feed back the status of the circuit breaker remotely.

The electrical auxiliaries are installed in dedicated locations under the front panel

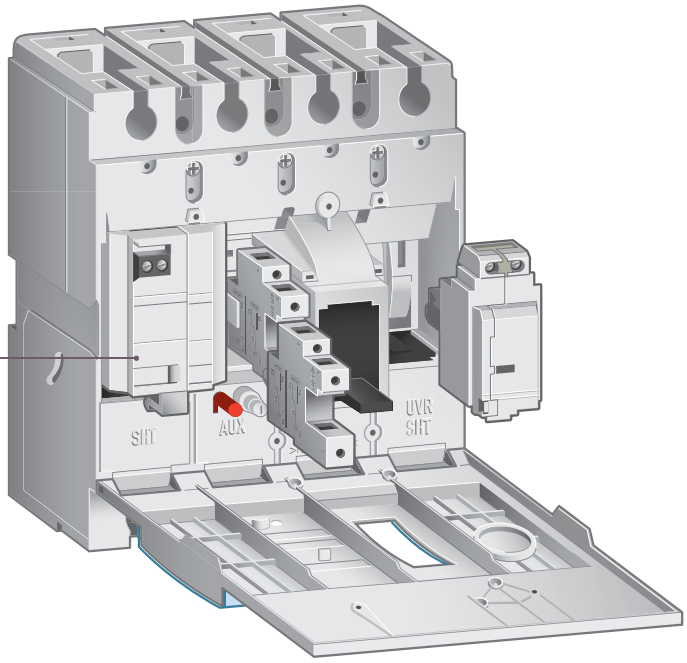

DPX³ have three options for the outgoing connection wires: via the front panel,

...via the side,

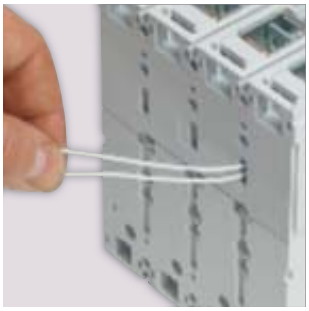

...or via the back

AUXILIARIES COMMON TO THE DPX³ 160 AND 250:

- Auxiliary or fault signal contact
- Current shunt trips
- Undervoltage releases

Connecting DPX³ 160 and 250

DPX³ 160 have cage terminals as standard for direct connection via cable or bars.
DPX³ 250 are supplied with plain connection plates for connection via bars or lugs.
They can have cage terminals as an option.

A complete range of connection accessories is also available for all installation configurations.

Connecting a DPX³ 160
via cables on integrated cage terminals

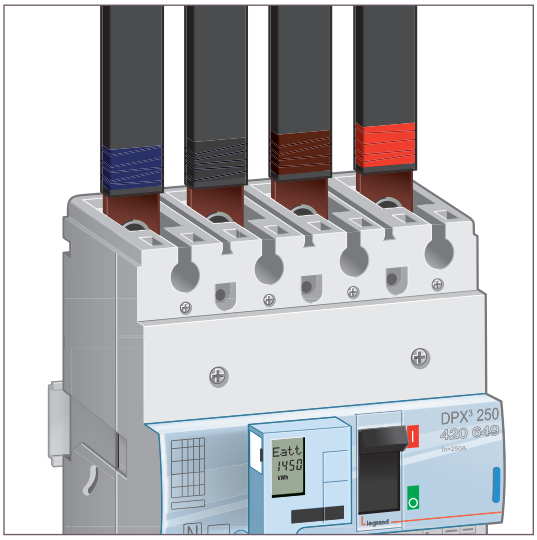

Connecting a DPX³
via flexible bars screwed onto plates

The spreaders enable
connection via large
cross-section cables

The flat rear terminals
are adjustable

The terminal shields provide
IP 2X protection
for the connections

LARGE CAPACITY CAGE TERMINALS

Large capacity cage terminals enable connection via cable up to 150 mm²
(see catalogue pages for more details)

RELIABLE AND SAFE DISTRIBUTION SYSTEM

The HX³/VX³ optimised distribution system

Optimised distribution is a complete, coherent system for distributing electricity in the panel:
- Optimised busbars (C-section copper and zinc plated aluminium)
- Prefabricated links for connecting devices to the busbars
- Horizontal distribution blocks with automatic connection of devices (can be connected while energised)

All these components, which have been tested with Legrand devices, can be used to created safe, easy to maintain panels that comply with standard IEC 61439, cut down installation time and optimise the size of enclosures.

VX³ vertical optimised distribution

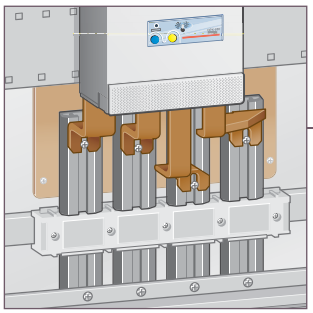

C-section busbars and power supply kit

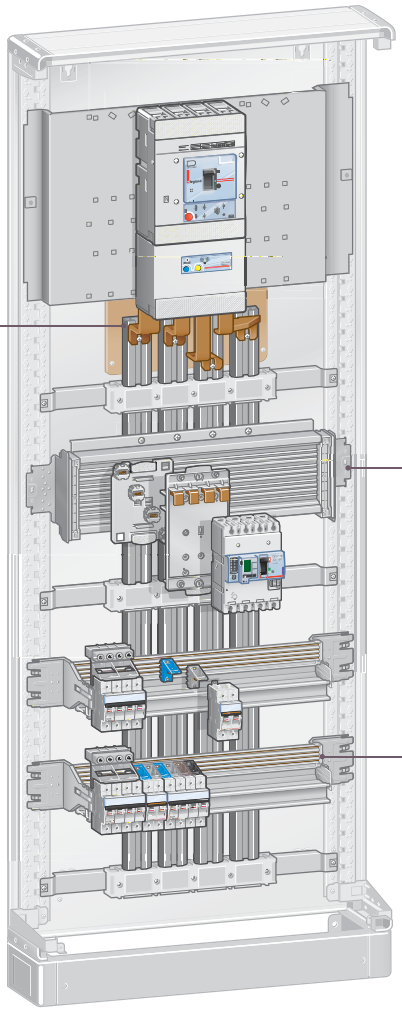

Optimised distribution in XL³ 400 - 800 enclosure

HX³ horizontal optimised distribution

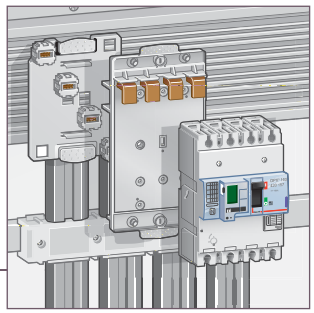

250 and 400 A row distribution block for DPX³ and modular devices

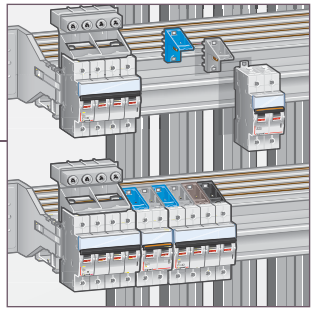

125 A row distribution block for modular devices

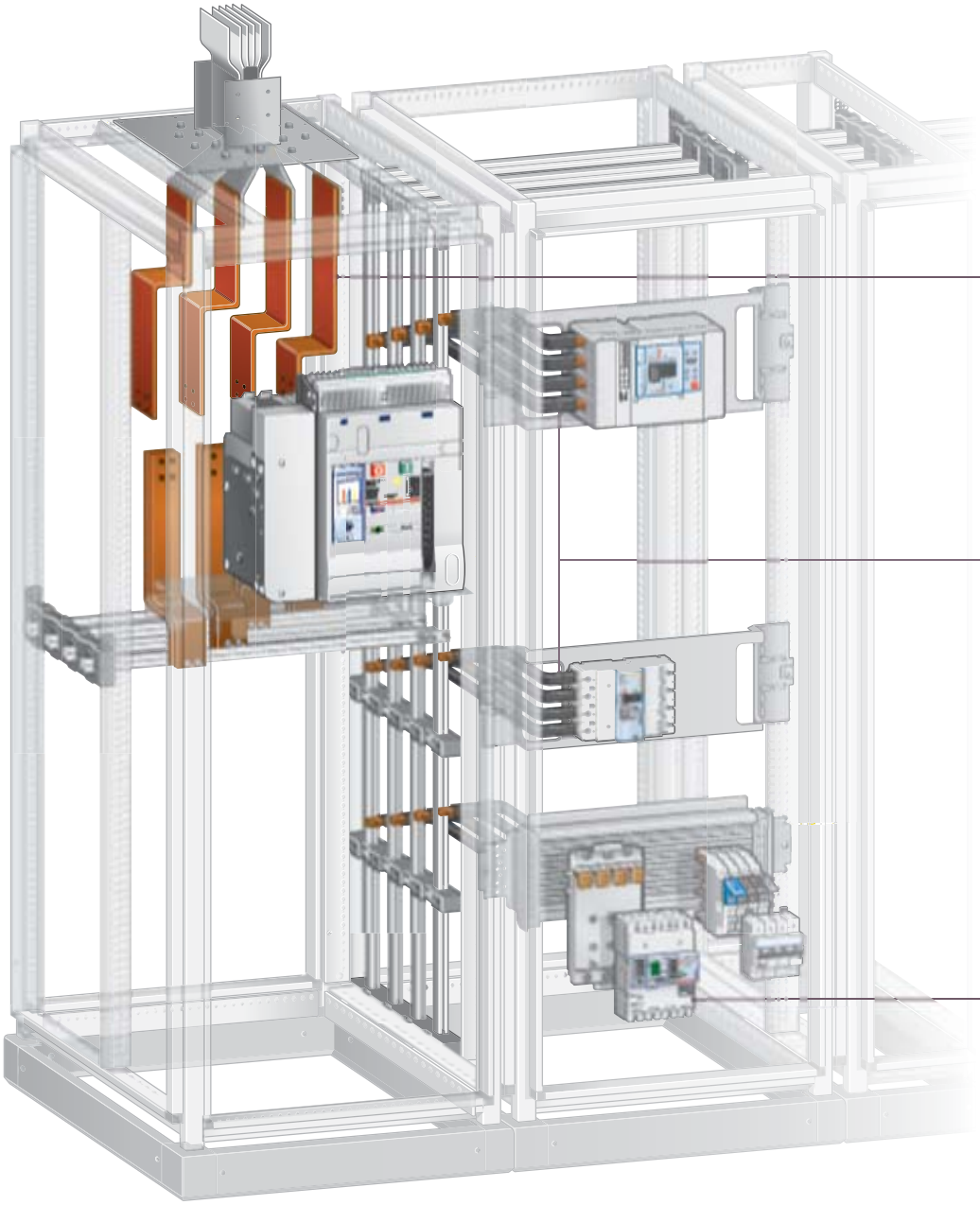

Optimised distribution in XL³ 4000 enclosure

VX³ vertical optimised distribution

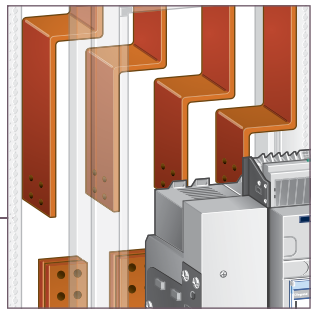

DMX³ **connection kit**

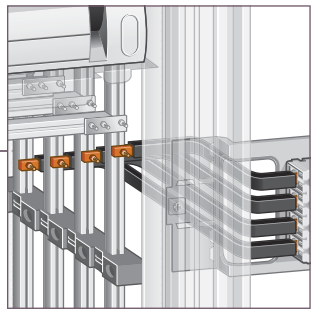

DPX³ **and** DPX **connection kits**

HX³ horizontal optimised distribution

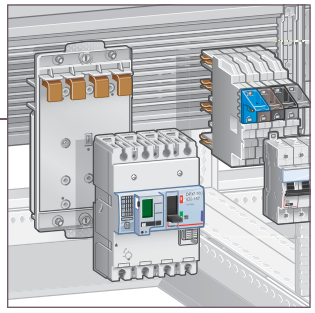

DPX³ and modular devices together on the same row

PERFECT INTEGRATION IN XL³ ENCLOSURES

Mounting on a ⊔ rail and on a plate-rail

All fixed version DPX³ with front terminals can be mounted on a ⊔ rail or on a plate-rail using an adaptor.
Mounting on a ⊔ rail enables DPX³ 160 to be installed in XL³ 125 or XL³ 160 cabinets.
Mounting on a plate-rail provides extra strength to withstand mechanical stresses while maintaining the possibility of mounting DPX³ 160 and 250 and modular devices together on the same row.

Examples of mounting in an XL³ 160 cabinet

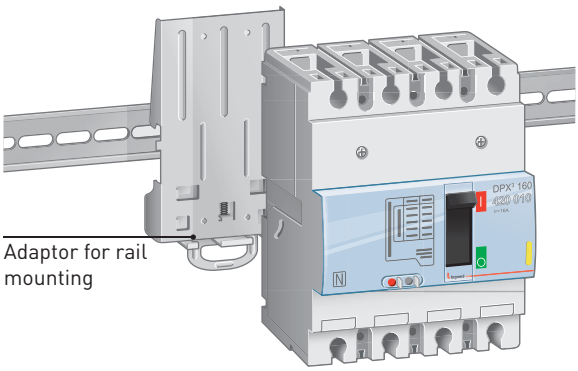

Mounting a DPX³ 160 on a rail

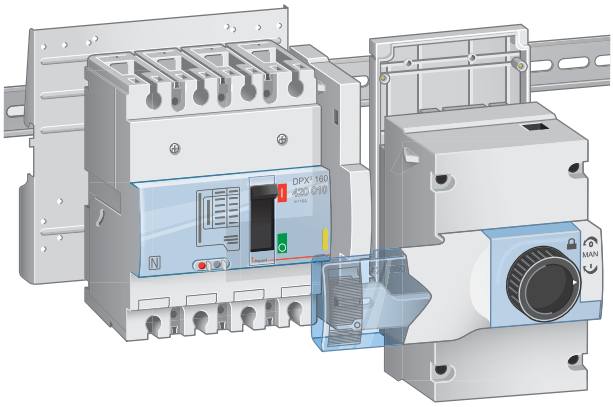

Mounting a DPX³ 160 with side motorised control on a rail

Examples of mounting in XL³ 400/800/4000 enclosures

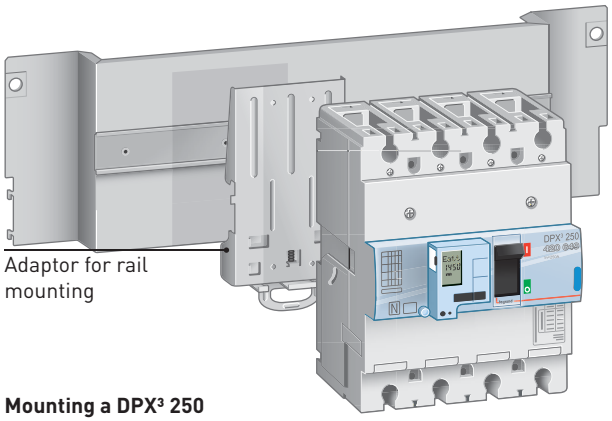

Mounting a DPX³ 250 on a plate-rail

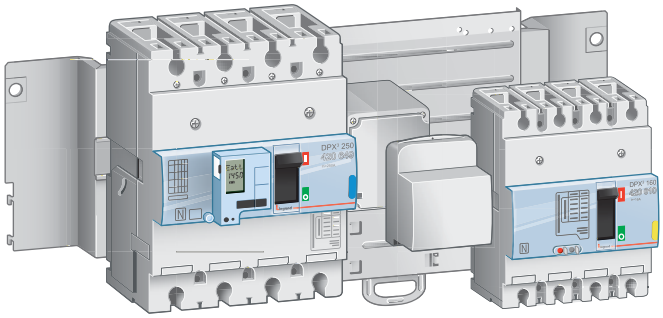

Mounting two DPX³ on a rail as supply invertors

➜ To select XL³ fixing equipment, please refer to the tables on pages 46 to 51 or use XL Pro³ (see page 22)

Mounting on a plate

There are dedicated plates for mounting DPX³ 160 and 250 in XL³ enclosures:
- Horizontally
- Plug-in version
- Connected via rear terminals
- With front rotary or motorised control

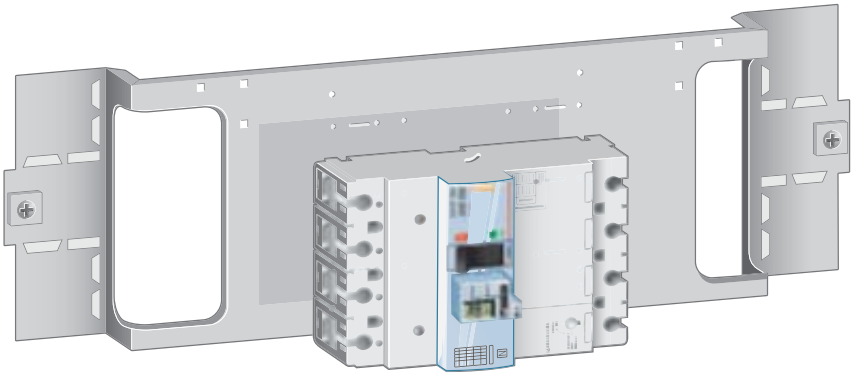

Mounting a DPX³ horizontally on a plate

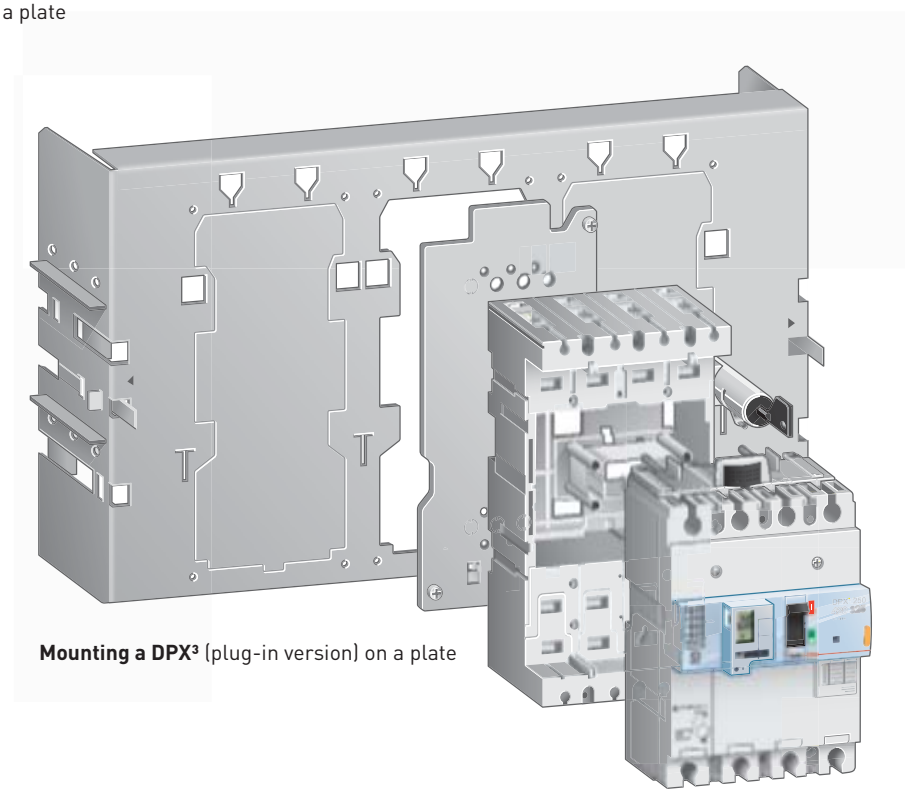

Mounting a DPX³ (plug-in version) on a plate

THE XL³ RANGE: THE ANSWER TO ALL YOUR REQUIREMENTS

Distribution panels from 125 to 4 000 A

From the XL³ 125 cabinet to the XL³ 4000 enclosure, the Legrand range meets all your quality standards: the strength and stylish design of XL³ panels ensure perfect, long-lasting integration.
The XL³ range features numerous practical innovations for quick, safe assembly, real freedom of configuration and considerable time-saving during maintenance and extension operations.

4 000 A

XL³ 4000 modular enclosures

800 A

XL³ 800 extendable cabinets and enclosures

400 A

XL³ 400 extendable cabinets and enclosures

160 A

XL³ 160 ready-to-use cabinets

125 A

XL³ 125 cabinets easy to install

XL³ 4000
Tapped holes for fixing functional uprights

XL³ 4000/800/400
Ergonomic or locking handle, solid or glazed doors

XL³ 800
Faster access and work with faceplates on hinges

XL³ 4000/800/400/160
1/4 turn faceplates with handle

The XL³ 125 cabinets

Optimised wiring for maximum ease of installation and time-saving. The faceplate can be removed one row at a time, or the whole cover can be taken off, depending on the extent of the work to be carried out inside the cabinet: wiring or maintenance.

A complete solution for small businesses and power service sector sites

Tool-free removable rail
Rails can be removed individually in a single movement, and without any tools, for easier cable routing

Cable connection is easy
Simply tilt the chassis up or down according to the direction of cable entry

Plug-in earth terminal block
Tool-free removal of the earth terminal block for easier cable routing

Removable cable entry plate
The cable entry plate can be removed without using any tools, to allow direct cable entry

XL³ 160
When the frame and side panels are completely removed, there is full access for wiring

LEGRAND SERVICES AND COMMITMENTS

XL PRO³ and XL PRO³ Calcul software

The XL PRO³ software is an upgraded version of your distribution panel design software: **revised interface, new DPX³ and DX³ ranges incorporated, HX³ and VX³ distribution accessible with a single click,** etc.

And it still includes all your functions:
- Guided selection of products and accessories
- Display of the enclosure and the component layout
- Automatic creation of the folder for costing and ordering

XL PRO³ Calcul interfaces with XL PRO³.
It enables you to create single-line diagrams, carry out design calculations, work out the power analysis, and calculate the necessary protective devices with their settings.

To order the software, please contact your Legrand sales office.

XL PRO³ EVEN MORE POWERFUL AND CLOSER TO YOUR REQUIREMENTS

The new offer included in the databases

HX³ and VX³ distribution managed directly in the layout and circuit diagrams and the parts list

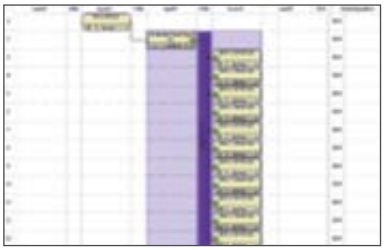

A re-designed interface for more intuitive use

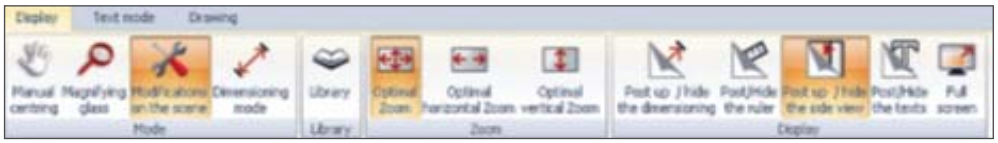

Environmental commitment

The Legrand Group prioritises materials and processes that respect people and the environment both on its industrial sites and in the design of its products. Through this approach, the Group reduces the impact of its activities while strengthening its economic performance and the appeal of its offers.

THE PEP: A RECOGNISED, RELIABLE TOOL

The PEP is tool that is used by the whole profession.
It gives a clear, accurate message.
The type of sheet shown below is the result of an overall process in the electrical industries.
It is based on standard ISO/TR 14025:
- Environmental labels and declarations
- Type III environmental declarations

It uses a recognised methodology and tools:
- Life cycle assessment (based on standard ISO 14040)
- EIME software (Environmental Information & Management Explorer).

The PEP, an eco-declaration which is available as a printed document

DPX³/DPX™
electrical characteristics

DEVICES	DPX³ 160 thermal magnetic (p. 26-27)				DPX³ 250 thermal magnetic (p. 28)				DPX³ 250 electronic release (p. 29)			
Mounting	On rail ⎓ or on plate				On rail ⎓ or on plate				On rail ⎓ or on plate			
Breaking capacity (kA) (EN 60947-2 and IEC 60947-2)	**16 kA**	**25 kA**	**36 kA**	**50 kA**	**25 kA**	**36 kA**	**50 kA**	**70 kA**	**25 kA**	**36 kA**	**50 kA**	**70 kA**
380/415 V∿	16	25	36	50	25	36	50	70	25	36	50	70
220/240 V∿	25	35	50	65	40	60	100	100	40	60	100	100
Breaking capacity (% Icu)	100	100	100	100	100	100	100	100	100	100	100	100
Characteristic of use												
Nominal frequency	50/60 Hz											
Maximum rated operating voltage Ue	690 V (500 V with integrated e.l.c.bs)				690 V (500 V with integrated e.l.c.bs)				690 V (500 V with integrated e.l.c.bs)			
Category of use	A				A				A			
Thermal magnetic adjustment												
Thermal	0,8 to 1 In				0,8 to 1 In				-			
Magnetic	10 In (400 A for 16 A and 25 A sizes)				5 to 10 In				-			
Electronic protection adjustment												
	-				-				Ir : 0,4 to 1 In Isd : 1,5 to 10 Ir			
Maximum cable cross-section												
Rigid cable	120 mm²				185 mm²				185 mm²			
Flexible cable	95 mm²				150 mm²				150 mm²			
Copper bar and lug width	18 mm				25 mm(1)				25 mm(1)			
Tightening torque	8 Nm				10 Nm				10 Nm			
Nominal current (In) at 40 °C (A)												
In (A)	16	25	40	63	80	100	125	160	100	160	200	250	40	100	160	250
Phase	16	25	40	63	80	100	125	160	100	160	200	250	40	100	160	250
N	16	25	40	63	80	100	125	160	100	160	200	250	40	100	160	250
N/2	-	-	-	-	-	-	-	-	-	-	-	-	-	-	-	-
Magnetic threshold (Im) (A)(2) of DPX therminal magnetic	Fixed								Adjustable							
In (A)	16	25	40	63	80	100	125	160	100	160	200	250	-			
Phase	400	400	400	630	800	1000	1250	1600	125-250	200-400	315-630	500-1000	-			
N	400	400	400	630	800	1000	1250	1600	125-250	200-400	315-630	500-1000	-			
N/2	-	-	-	-	-	-	-	-	-	-	-	-	-			
Endurance (cycles)												
Electrical	8000				8000				8000			
Mechanical	25000				20000				20000			
Electronic earth leakage module												
Type	without or integrated				without or integrated				without or integrated			

(1) Copper bars only
(2) Trip current for 50/60 Hz. For direct current, multiply by 1.5

	DPX 250 thermal magnetic (p. 34-36)					DPX 250 electronic release (p. 34-36)				DPX 630 thermal magnetic (p. 37-39)					DPX 630 electronic release (p. 37-39)			DPX 1250 thermal magnetic (p. 40)				DPX 1600 electronic release (p. 40)			
	On plate					On plate				On plate					On plate			On plate				On plate			
	36 kA				70 kA(3)	36 kA			70 kA(3)	36 kA				70 kA(3)	36 kA		70 kA(3)	36 kA			70 kA(3)	50 kA			70 kA(1)(3)
	36				70	36			70	36				70	36		70	50			70	50			70
	60				100	60			100	60				100	60		100	80			100	80			100
	100				75	100			75	100				75	100		75	100			75	100			75
	50/60 Hz																								
	690 V∿ - 250 V⎓					690 V∿				690 V∿ - 250 V⎓					690 V∿			690 V∿				690 V∿			
	A					A				A					A: In 630 A B: In 200 to 400 A			A				B			
	0.64 to 1 In					-				0.8 to 1 In					-			0.8 to 1 In				-			
	3.5 to 10 In					-				5 to 10 In					-			5 to 10 In				-			
	-					Ir: 0.4 to 1 In Tr: 5 to 30 s Isd: 1.5 to 10 Ir Tsd: 0 to 0.3 s I^2t = K Tsd: 0.01 to 0.3 s				-					Ir: 0.4 to 1 In Tr: 5 to 30 s Isd: 1.5 to 10 Ir Tsd: 0 to 0.3 s I^2t = K Tsd: 0.01 to 0.3 s			-				Ir: 0.4 to 1 In Tr: 5 to 30 s Isd: 1.5 to 10 Ir Tsd: 0 to 0.3 s I^2t = K Tsd: 0.01 to 0.3 s			
	185 mm²					185 mm²				300 mm² or 2 x 240 mm²					300 mm² or 2 x 240 mm²			2 or 4 x 240 mm²				2 or 4 x 240 mm²			
	150 mm²					150 mm²				240 mm² or 2 x 185 mm²					240 mm² or 2 x 185 mm²			2 or 4 x 185 mm²				2 or 4 x 185 mm²			
	25 mm					25 mm				32 mm					32 mm			50 mm				50 mm			
	15 Nm					15 Nm				15 Nm								20 Nm							
	40	63	100	160	250	40	100	160	250	250	320	400	500	630	250	400	630	630	800	1000	1250	630	800	1250	1600
	40	63	100	160	250	40	100	160	250	250	320	400	500	630	250	400	630	630	800	1000	1250	630	800	1250	1600
	40	63	100	160	250	0 - 50 - 100 % of phase value				250	320	400	500	630	0 - 50 - 100 % of phase value			630	800	1000	1250	0 - 50 - 100 % of phase value			
	-	-	-	100	160					-	250	250	250	320											
	Adjustable																								
	40	63	100	160	250	-				250	320	400	500	630	-			800	1000	1250		-			
	140 - 400	220 - 630	350 - 1000	560 - 1600	900 - 2500	-				1250-2500	1600-3200	2000-4000	2500-5000	3150-6300	-			4000 - 8000	5000 - 10000	6250 - 12500		-			
	140 - 400	220 - 630	350 - 1000	560 - 1600	900 - 2500	-				1250-2500	1600-3200	2000-4000	2500-5000	3150-6300	-							-			
	-	-	-	350 - 1000	560 - 1600	-				800-1600	1000-2000	1250-2500	1600-2500	2000-4000	-							-			
	8000					8000				5000					5000			3000				2000			
	20000					20000				15000					15000			10000				10000			
	downstream e.l.c.bs.					downstream e.l.c.bs.				downstream e.l.c.bs.					downstream e.l.c.bs.			-				-			

DPX³ 160 thermal magnetic

MCCBs from 16 to 160 A

420 000

420 010

420 037

420 157

Technical characteristics and tripping curves (p. 60-62)
Dimensions (p. 54)

Can be mounted on rail ⊔ or on plate in XL³ cabinets and enclosures
MCCBs for switching, control isolation and protection of low voltage electrical lines
Supplied with cage terminals 70 mm² max. (flexible cable) or 95 mm² max. rigid cable with accessories
Can be fitted with accessories and DPX³ common auxiliaires (p. 32)
Conform to IEC 60947-2

MCCBs - fixed version

Thermal adjustable from 0,8 to 1 In
Magnetic fixed at 10 In (fixed at 400 A for In 16 A and 25 A)

Pack	Cat.Nos 3P	Cat.Nos 4P	In (A)
			Breaking capacity Icu 16 kA (400 V∿)
1	420 000	420 010	16
1	420 001	420 011	25
1	420 002	420 012	40
1	420 003	420 013	63
1	420 004	420 014	80
1	420 005	420 015	100
1	420 006	420 016	125
1	420 007	420 017	160
			Breaking capacity Icu 25 kA (400 V∿)
1	420 040	420 050	16
1	420 041	420 051	25
1	420 042	420 052	40
1	420 043	420 053	63
1	420 044	420 054	80
1	420 045	420 055	100
1	420 046	420 056	125
1	420 047	420 057	160
			Breaking capacity Icu 36 kA (400 V∿)
1	420 080	420 090	16
1	420 081	420 091	25
1	420 082	420 092	40
1	420 083	420 093	63
1	420 084	420 094	80
1	420 085	420 095	100
1	420 086	420 096	125
1	420 087	420 097	160
			Breaking capacity Icu 50 kA (400 V∿)
1	420 120	420 130	16
1	420 121	420 131	25
1	420 122	420 132	40
1	420 123	420 133	63
1	420 124	420 134	80
1	420 125	420 135	100
1	420 126	420 136	125
1	420 127	420 137	160

MCCBs with electronic earth leakage module - fixed version

Thermal adjustable from 0,8 to 1 In
Magnetic fixed at 10 In (fixed at 400 A for In 16 A and 25 A)
Equipped with earth leakage module with LCD screen
Adjustable sensitivity: 0.03 - 0.3 - 1 - 3 A
Adjustable tripping: 0 - 0.3 - 1 - 3s (with 0.03 A possible only 0s)

Pack	Cat.Nos 4P	In (A)
		Breaking capacity Icu 16 kA (400 V∿)
1	420 030	16
1	420 031	25
1	420 032	40
1	420 033	63
1	420 034	80
1	420 035	100
1	420 036	125
1	420 037	160
		Breaking capacity Icu 25 kA (400 V∿)
1	420 070	16
1	420 071	25
1	420 072	40
1	420 073	63
1	420 074	80
1	420 075	100
1	420 076	125
1	420 077	160
		Breaking capacity Icu 36 kA (400 V∿)
1	420 110	16
1	420 111	25
1	420 112	40
1	420 113	63
1	420 114	80
1	420 115	100
1	420 116	125
1	420 117	160
		Breaking capacity Icu 50 kA (400 V∿)
1	420 150	16
1	420 151	25
1	420 152	40
1	420 153	63
1	420 154	80
1	420 155	100
1	420 156	125
1	420 157	160

Red catalogue numbers: New products

DPX³ 160 equipment and mounting accessories

421 040

421 036

Pack	Cat.Nos	Equipment for plug-in version
		A plug-in version DPX³ is a fixed version DPX³ mounted on a plug-in base
		Plug-in bases for DPX³ 160
		Front or rear terminal mounting base
1	421 040	For DPX³ 160 - 3P
1	421 041	For DPX³ 160 - 4P with or without earth leakage module
		Connectors for auxiliary contacts
1	421 044	Set of connectors
		Padlocks for plug-in base
1	421 045	Ronis locking accessory
1	421 046	Profalux locking accessory
1	421 047	Padlock accessory
		Connection accessories
		Cage terminals
		For Cu/Al cables, 1 x 95 mm² for flexible cables and 1 x 120 mm² for rigid cable and bars or lugs 18 mm
1	421 026	Set of 3 terminals
1	421 027	Set of 4 terminals
		Insulated shields
1	421 070	Set of 3 insulated shields
		Extended front terminals
		For copper bars
1	421 028	Set of 3 terminals
1	421 029	Set of 4 terminals
		Spreaders
		For incoming bars or cable lugs
1	421 032	Set of 3 spreaders for DPX³ 160 3P
1	421 033	Set of 4 spreaders for DPX³ 160 4P
		Rear terminals
		Flat swivel terminals
		Used to convert a fixed version with front terminals to a fixed version with rear terminals
1	421 036	Set of 3 rear terminals for DPX³ 160 3P
1	421 037	Set of 4 rear terminals for DPX³ 160 4P
		Sealable terminal shields
		For front terminals
1	421 054	For DPX³ 160 3P
1	421 055	For DPX³ 160 3P
		For rear terminals
1	421 050	For DPX³ 160 3P
1	421 051	For DPX³ 160 4P
		Fixing plates
		For fixing DPX³ 160 on ⊔ rail or on plate
1	421 071	For DPX³ 160 3P/4P without earth leakage module
1	421 073	For DPX3 160 4P with earth leakage module
	421 068	For DPX3 160 3P/4P with side mounting motor operator

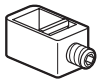

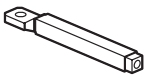

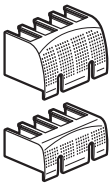

XL³ mounting accessories (p. 46-53)
Accessories (p. 32)

DPX³ 160
connection

■ Connection

Direct connection

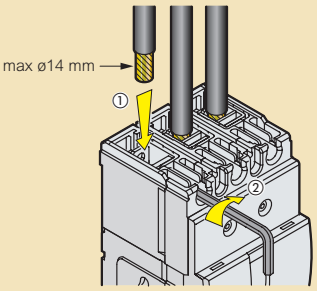

Flexible
1,5 ⟶ 70 mm²
#16 ⟶ #2/0 AWG
or
Solid
1,5 ⟶ 95 mm²
#16 ⟶ #4/0 AWG

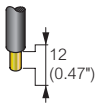

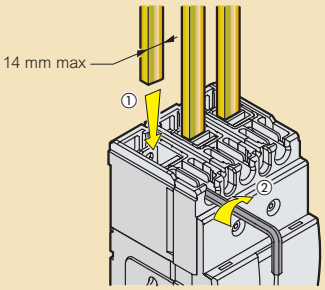

Spreaders

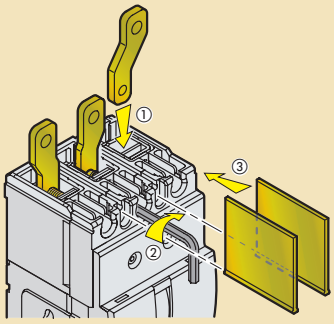

Rear terminals

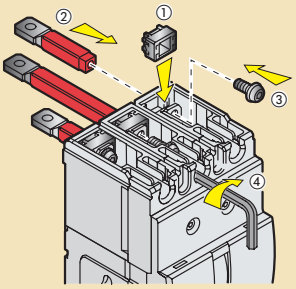

Sealable terminal shield

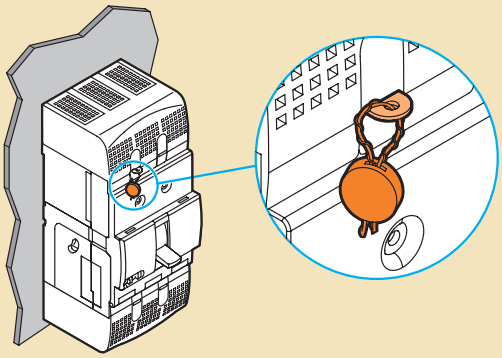

Red catalogue numbers: New products

DPX³ 250 thermal magnetic

MCCBs from 100 to 250 A

420 205

420 225

Technical characteristics and tripping curves (p. 60-62)
Dimensions (p. 55)

Can be mounted on rail ⊔ or on plate in XL³ cabinets and enclosures
MCCBs for switching, control isolation and protection of low voltage electrical lines
Supplied with insulated shileds, screw terminals 120 mm² max. (flexible cable) or 150 mm² max. rigid cable with accessories
Can be fitted with accessories and DPX³ common auxiliaires (p. 32)
Conform to IEC 60947-2

MCCBs - fixed version

Thermal adjustable from 0,8 to 1 In
Magnetic adjustable from 5 to 10 In

Pack	Cat.Nos 3P	Cat.Nos 4P	In (A)
			Breaking capacity Icu 25 kA (400 V∿)
1	420 205	420 215	100
1	420 207	420 217	160
1	420 208	420 218	200
1	420 209	420 219	250
			Breaking capacity Icu 36 kA (400 V∿)
1	420 235	420 245	100
1	420 237	420 247	160
1	420 238	420 248	200
1	420 239	420 249	250
			Breaking capacity Icu 50 kA (400 V∿)
1	420 265	420 275	100
1	420 267	420 277	160
1	420 268	420 278	200
1	420 269	420 279	250
			Breaking capacity Icu 70 kA (400 V∿)
1	420 605	420 615	100
1	420 607	420 617	160
1	420 608	420 618	200
1	420 609	420 619	250

MCCBs with electronic earth leakage module - fixed version

Thermal adjustable from 0,8 to 1 In
Magnetic adjustable from 5 to 10 In
Equipped with earth leakage module with LCD screen
Adjustable sensitivity: 0.03 - 0.3 - 1 - 3 A
Adjustable tripping: 0 - 0.3 - 1 - 3s (with 0.03 A possible only 0s)

Pack	Cat.Nos 4P	In (A)
		Breaking capacity Icu 25 kA (400 V∿)
1	420 225	100
1	420 227	160
1	420 228	200
1	420 229	250
		Breaking capacity Icu 36 kA (400 V∿)
1	420 255	100
1	420 257	160
1	420 258	200
1	420 259	250
		Breaking capacity Icu 50 kA (400 V∿)
1	420 285	100
1	420 287	160
1	420 288	200
1	420 289	250
		Breaking capacity Icu 70 kA (400 V∿)
1	420 625	100
1	420 627	160
1	420 628	200
1	420 629	250

Red catalogue numbers: New products

DPX³ 250 electronic release

MCCBs from 40 to 250 A

420 369

420 325

Technical characteristics and tripping curves (p. 60-62)
Dimensions (p. 55)

Can be mounted on rail ⊥⊔ or on plate in XL³ cabinets and enclosures
MCCBs for switching, control isolation and protection of low voltage electrical lines
Supplied with insulated shileds, screw terminals 120 mm² max. (flexible cable) or 150 mm² max. rigid cable with accessories
Can be fitted with accessories and DPX³ common auxiliaires (p. 32)
Conform to IEC 60947-2

MCCBs - fixed version

Protection against overloads:
Ir adjustable from 0.4 to 1 x In
Tr adjustable from 3 to 15s (p. 62)
Protection against short circuits:
Isd adjustable from 1.5 to 10 x Ir
Tsd adjustable from 0 to 0.5s (p. 62)

Pack	Cat.Nos 3P	Cat.Nos 4P	In (A)
			Breaking capacity Icu 25 kA (400 V∿)
1	420 302	420 312	40
1	420 305	420 315	100
1	420 307	420 317	160
1	420 309	420 319	250
			Breaking capacity Icu 36 kA (400 V∿)
1	420 332	420 342	40
1	420 335	420 345	100
1	420 337	420 347	160
1	420 339	420 349	250
			Breaking capacity Icu 50 kA (400 V∿)
1	420 362	420 372	40
1	420 365	420 375	100
1	420 367	420 377	160
1	420 369	420 379	250
			Breaking capacity Icu 70 kA (400 V∿)
1	420 635	420 645	40
1	420 637	420 647	100
1	420 638	420 648	160
1	420 639	420 649	250

MCCBs with electronic earth leakage module - fixed version

Protection against overloads:
Ir adjustable from 0.4 to 1 x In
Tr adjustable from 3 to 15s (p. 62)
Protection against short circuits:
Isd adjustable from 1.5 to 10 x Ir
Tsd adjustable from 0 to 0.5s (p. 62)
Equipped with earth leakage module with LCD screen
Adjustable sensitivity: 0.03 - 0.3 - 1 - 3 A
Adjustable tripping: 0 - 0.3 - 1 - 3s (with 0.03 A possible only 0s)

Pack	Cat.Nos 4P	In (A)
		Breaking capacity Icu 25 kA (400 V∿)
1	420 322	40
1	420 325	100
1	420 327	160
1	420 329	250
		Breaking capacity Icu 36 kA (400 V∿)
1	420 352	40
1	420 355	100
1	420 357	160
1	420 359	250
		Breaking capacity Icu 50 kA (400 V∿)
1	420 382	40
1	420 385	100
1	420 387	160
1	420 389	250
		Breaking capacity Icu 70 kA (400 V∿)
1	420 655	40
1	420 657	100
1	420 658	160
1	420 659	250

Red catalogue numbers: New products

DPX³ 250 electronic release

MCCBs from 40 to 250 A (continued)

420 649

Technical characteristics and tripping curves (p. 60-62)
Dimensions (p. 55)

Can be mounted on rail ⊔ or on plate in XL³ cabinets and enclosures
MCCBs for switching, control isolation and protection of low voltage electrical lines
Supplied with insulated shileds, screw terminals 120 mm² max. (flexible cable) or 150 mm² max. rigid cable with accessories
Can be fitted with accessories and DPX³ common auxiliaires (p. 32)
Conform to IEC 60947-2

MCCBs with energy metering central unit - fixed version

Protection against overloads:
Ir adjustable from 0.4 to 1 x In
Tr adjustable from 3 to 15s (p. 62)
Protection against short circuits:
Isd adjustable from 1.5 to 10 x Ir
Tsd adjustable from 0 to 0.5s (p. 62)
Integrated energy metering central unit with LCD screen; currents, voltage, frequency, power, energy and harmonics

Pack	Cat.Nos 3P	Cat.Nos 4P	In (A)
			Breaking capacity Icu 25 kA (400 V∿)
1	420 402	420 412	40
1	420 405	420 415	100
1	420 407	420 417	160
1	420 409	420 419	250
			Breaking capacity Icu 36 kA (400 V∿)
1	420 432	420 442	40
1	420 435	420 445	100
1	420 437	420 447	160
1	420 439	420 449	250
			Breaking capacity Icu 50 kA (400 V∿)
1	420 462	420 472	40
1	420 465	420 475	100
1	420 467	420 477	160
1	420 469	420 479	250
			Breaking capacity Icu 70 kA (400 V∿)
1	420 665	420 675	40
1	420 667	420 677	100
1	420 668	420 678	160
1	420 669	420 679	250

MCCBs with energy metering central unit and electronic earth leakage module - fixed version

Protection against overloads:
Ir adjustable from 0.4 to 1 x In
Tr adjustable from 3 to 15s (p. 62)
Protection against short circuits:
Isd adjustable from 1.5 to 10 x Ir
Tsd adjustable from 0 to 0.5s (p. 62)
Equipped with earth leakage module with LCD screen
Adjustable sensitivity: 0.03 - 0.3 - 1 - 3 A
Adjustable tripping: 0 - 0.3 - 1 - 3s (with 0.03 A possible only 0s)
Integrated energy metering central unit with LCD screen; currents, voltage, frequency, power, energy and harmonics

Pack	Cat.Nos 4P	In (A)
		Breaking capacity Icu 25 kA (400 V∿)
1	420 422	40
1	420 425	100
1	420 427	160
1	420 429	250
		Breaking capacity Icu 36 kA (400 V∿)
1	420 452	40
1	420 455	100
1	420 457	160
1	420 459	250
		Breaking capacity Icu 50 kA (400 V∿)
1	420 482	40
1	420 485	100
1	420 487	160
1	420 489	250
		Breaking capacity Icu 70 kA (400 V∿)
1	420 685	40
1	420 687	100
1	420 688	160
1	420 689	250

Communication interface (p. 32)

Red catalogue numbers: New products

DPX³ 250 electronic release
MCCBs from 40 to 250 A (continued)

420 549

Technical characteristics and tripping curves (p. 60-62)
Dimensions (p. 55)

Can be mounted on rail ⊔ or on plate in XL³ cabinets and enclosures
MCCBs for switching, control isolation and protection of low voltage electrical lines
Supplied with insulated shileds, screw terminals 120 mm² max. (flexible cable) or 150 mm² max. rigid cable with accessories
Can be fitted with accessories and DPX³ common auxiliaires (p. 32)
Conform to IEC 60947-2

Pack	Cat.Nos 3P	Cat.Nos 4P	Electronic release Sg MCCBs - fixed version In (A)
			Protection against averloads: Ir adjustable from 0.4 to 1 x In Tr adjustable from 3 to 15s (p. 62) Protection against short circuits: Isd adjustable from 1.5 to 10 x Ir Tsd adjustable from 0 to 0.5s (p. 62) Protection against earth fault: Ig adjustable: from 0.2 to 1 x In and OFF position Tg adjustable from 0.1 to 1s (p. 62)
			Breaking capacity Icu 25 kA (400 V∿)
1	420 502	420 512	40
1	420 505	420 515	100
1	420 507	420 517	160
1	420 509	420 519	250
			Breaking capacity Icu 36 kA (400 V∿)
1	420 522	420 532	40
1	420 525	420 535	100
1	420 527	420 537	160
1	420 529	420 539	250
			Breaking capacity Icu 50 kA (400 V∿)
1	420 542	420 552	40
1	420 545	420 555	100
1	420 547	420 557	160
1	420 549	420 559	250
			Breaking capacity Icu 70 kA (400 V∿)
1	420 692	420 702	40
1	420 695	420 705	100
1	420 697	420 707	160
1	420 699	420 709	250

DPX³ 250 equipment and mounting accessories

421 044

421 031

421 072

Pack	Cat.Nos	Equipment for plug-in version
		A plug-in version DPX³ is a fixed version DPX³ mounted on a plug-in base
		Plug-in bases for DPX³ 160
		Front or rear terminal mounting base
1	421 042	For DPX³ 250 - 3P
1	421 043	For DPX³ 250 - 4P with or without earth leakage module
		Connectors for auxiliary contacts
1	421 044	Set of connectors
		Padlocks for plug-in base
1	421 045	Ronis locking accessory
1	421 046	Profalux locking accessory
1	421 047	Padlock accessory

		Connection accessories
		Cage terminals
		For Cu/Al cables, 1 x 150 mm² for flexible cables and 1 x 180 mm² for rigid cable and bars or lugs 25 x 8 mm
1	421 030	Set of 3 terminals
1	421 031	Set of 4 terminals
		Insulated shields
1	421 070	Set of 3 insulated shields
		Spreaders
		For incoming bars or cable lugs
1	421 034	Set of 3 spreaders for DPX³ 250 3P
1	421 035	Set of 4 spreaders for DPX³ 250 4P
		Rear terminals
		Flat swivel terminals
		Used to convert a fixed version with front terminals to a fixed version with rear terminals
1	421 038	Set of 3 rear terminals for DPX³ 250 3P
1	421 039	Set of 4 rear terminals for DPX³ 250 4P

		Sealable terminal shields
		For front terminals
1	421 056	For DPX³ 250 3P
1	421 057	For DPX³ 250 4P
		For rear terminals
1	421 052	For DPX³ 250 3P
1	421 053	For DPX³ 250 4P

		Fixing plates
		For fixing DPX³ 250 on ⊔ rail or on plate
1	421 072	For DPX3 250 3P/4P without earth leakage module
1	421 074	For DPX3 250 4P with earth leakage module
1	421 069	For DPX3 250 3P/4P with side mounting motor operator

XL³ mounting accessories (p. 46-53)
Accessories (p. 32)

DPX³ 160 and 250 common auxiliaries and accessories

421 000

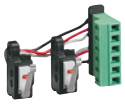

421 010

421 011

421 016

421 022

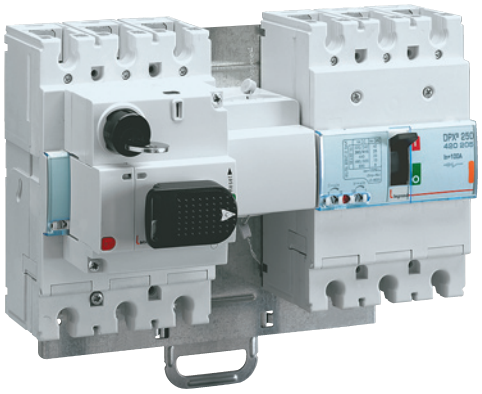

421 058

Pack	Cat.Nos	Supply invertor type
		Plate for mounting and interlocking of 2 DPX³ For 2 DPX³ 160 or 2 DPX³ 250 or 1 DPX³ 160 and 1 DPX³ 250
1	421 058	For fixed version
1	421 059	For plug-in and draw-out version
		Rotary handles
		Direct on DPX
1	421 000	Standard handle for thermal magnetic DPX³ without earth leakage module
1	421 001	Standard handle for electronic DPX³ and/or with earth leakage module
1	421 002	Handle for emergency use for thermal magnetic DPX³ without earth leakage module
1	421 003	Handle for emergency use for electronic DPX³ and/or with earth leakage module
		Vari-depth handles
		For all version of DPX³
1	421 004	Standard handle
1	421 005	Handle for emergency use
		Locking accessories
1	421 006	Ronis for direct handle
1	421 007	Profalux for direct handle
1	421 008	Ronis for vari-depth handle
1	421 009	Profalux for vari-depth handle
		Motor-driven handles
		Motor operators 24 to 230 V∿/⎓
1	421 060	Side motor operator
1	421 061	Front motor operator
		Locking accessories
1	421 062	Ronis key barrel for front motor operator
1	421 063	Profalux key barrel for front motor operator
1	421 064	Padlock for front motor operator
1	421 065	Ronis key barrel for side motor operator
1	421 066	Profalux key barrel for side motor operator
1	421 067	Padlock for side motor operator

Pack	Cat.Nos	Auxiliaries
		Auxiliary contacts
1	421 010	1 N/C + 1 N/O auxiliary contact for rotary handles
1	421 011	Auxiliary contact or fault signalling contact
1	421 048	Signalling contact plugged-in / drawn-out (for DPX³ plug-in version)
		Shunt releases
1	421 012	12 V∿/⎓
1	421 013	24 V∿/⎓
1	421 014	48 V∿/⎓
1	421 015	110-130 V∿/⎓
1	421 016	200-277 V∿/⎓
1	421 017	380-480 V∿/⎓
		Undervoltage releases
1	421 018	12 V∿/⎓
1	421 019	24 V∿/⎓
1	421 020	48 V∿/⎓
1	421 021	110-130 V∿/⎓
1	421 022	200-240 V∿/⎓
1	421 023	277 V∿
1	421 024	380-415 V∿
1	421 025	440-480 V∿
		Locking accessory
1	421 049	Padlock for locking in "open" position
		Communication interface
1	421 075	Modbus

Red catalogue numbers: New products

DPX³ 160/250

■ Auxiliaries mounting

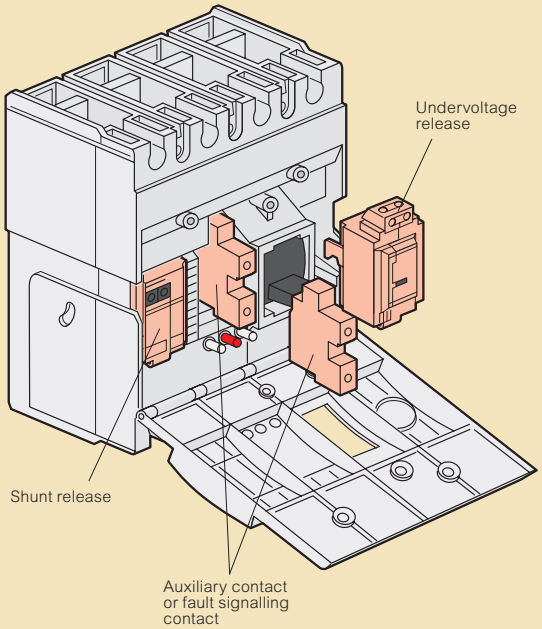

■ Direct rotary handle

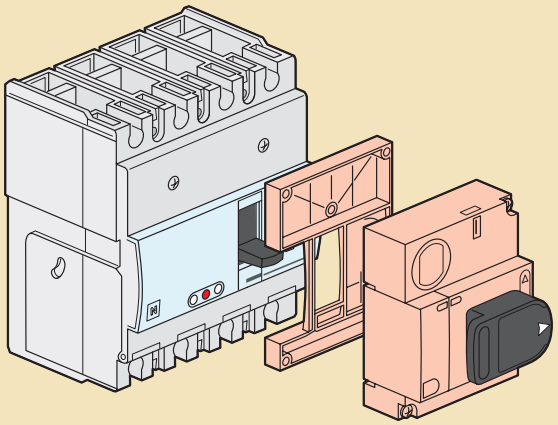

■ Plug-in version

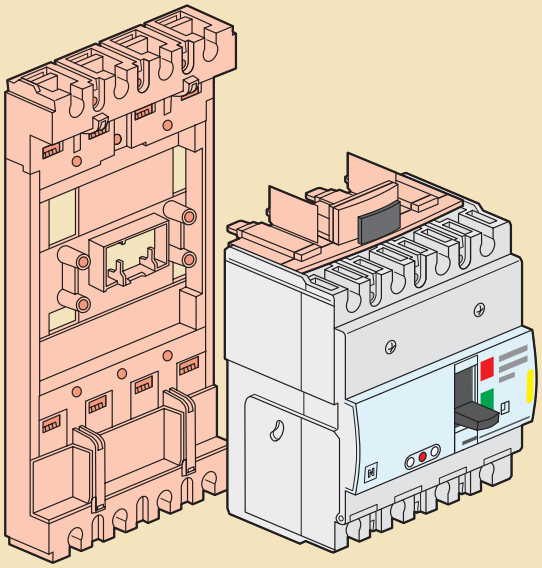

■ Side mounting motor-driven handle

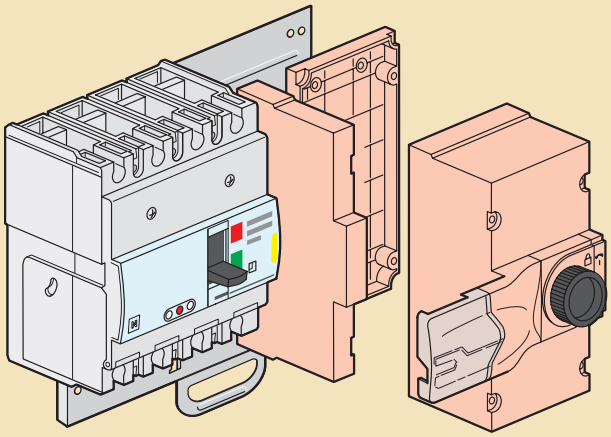

■ Front mounting motor-driven handle

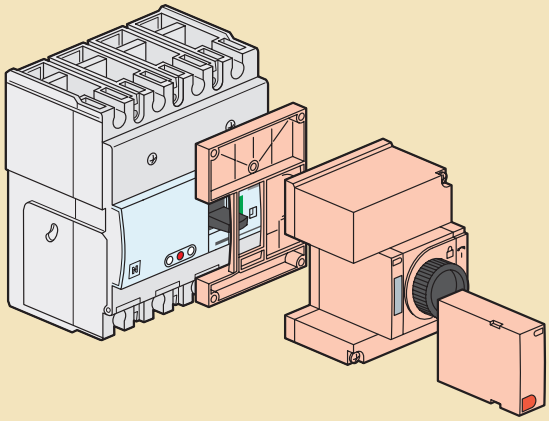

■ Supply invertor type

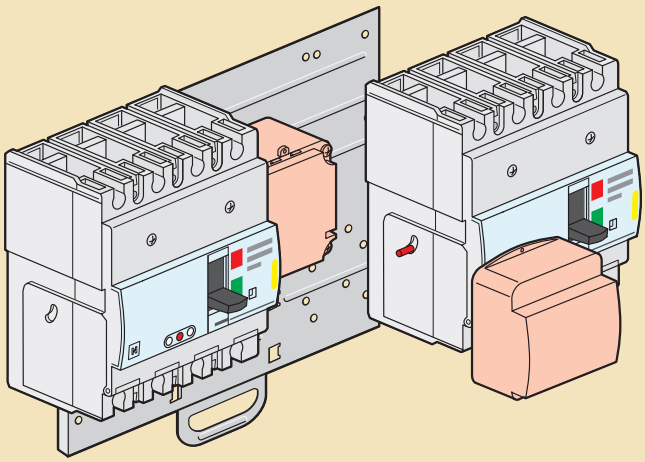

DPX™ 250
thermal magnetic and electronic release MCCBs from 40 to 250 A

253 56

253 73

Dimensions (p. 57)
Electrical characteristics (p. 62-63)

MCCBs for switching, control isolation and protection of low voltage electrical lines
Can be fitted with auxiliaries (p. 42)
Can be used with earth leakage modules (p. 35) or with residual current relays (p. 43)
Supplied complete with:
- connection plates for bars
- upstream and downstream connection devices for lugs (width max. 20 mm)
- terminal shields

Conform to IEC 60947-2
Sealable adjustment
Can be mounted on plate in XL³ cabinets and enclosures

Thermal magnetic MCCBs - fixed version

Thermal adjustable from 0.64 to 1 In
Magnetic adjustable from 3.5 to 10 In

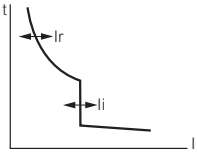

Breaking capacity Icu 36 kA (400 V∿)

Pack	Cat.Nos 3P	Cat.Nos 4P	In (A)
1	253 28	253 45	40
1	253 29	253 46	63
1	253 30	253 47	100
1	253 31	253 48	160
1	253 32	253 49	250
	3P + N/2		In (A))
1	253 41		160
1	253 42		250

Breaking capacity Icu 70 kA (400 V∿)

Pack	Cat.Nos 3P	Cat.Nos 4P	In (A)
1	253 52	253 69	40
1	253 53	253 70	63
1	253 54	253 71	100
1	253 55	253 72	160
1	253 56	253 73	250
	3P + N/2		In (A)
1	253 66		250

Electronic release S1 MCCBs - fixed version

Adjustment of Ir and Isd (p. 63)
Instantaneous protection 40 A: if = 1 kA
100/160/250 A: if = 3 kA
Indicator lamp
Minimum current for indicator lamp operation (30 % of In) - green: normal - fixed red: I ≥ 0.9 Ir - flushing red: I ≥ 1.05 Ir
Connector for test unit
Dynamic selectivity
4P version: adjustment of neutral on front panel

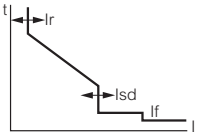

Breaking capacity Icu 36 kA (400 V∿)

Pack	Cat.Nos 3P	Cat.Nos 4P	In (A)
1	254 01	254 07	40
1	254 03	254 09	100
1	254 04	254 10	160
1	254 05	254 11	250

Breaking capacity Icu 70 kA (400 V∿)

Pack	Cat.Nos 3P	Cat.Nos 4P	In (A)
1	254 13	254 19	40
1	254 15	254 21	100
1	254 16	254 22	160
1	254 17	254 23	250

DPX™ 250
thermal magnetic and electronic release MCCBs from 40 to 250 A (continued)

260 55

260 53

265 32

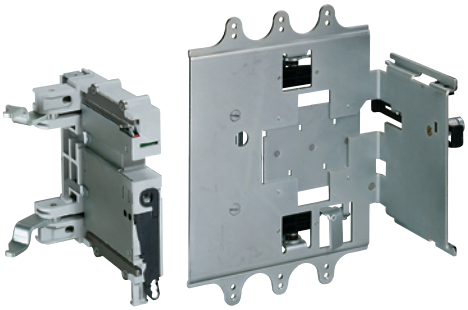
265 46

Electronic release S2 MCCBs - fixed version

Adjustment of Ir, Isd, Tr, Tsd (p. 63)
Instantaneous protection 40 A: if = 1 kA
100/160/250 A: if = 3 kA
Indicator lamp
Minimum current for indicator lamp operation (30 % of In) - green: normal - fixed red: I ≥ 0.9 Ir - flushing red: I ≥ 1.05 Ir
Connector for test unit
Logic and dynamic selectivity
4P version: adjustment of neutral on front panel

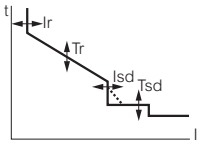

Pack	Cat.Nos 3P	Cat.Nos 4P	
			Breaking capacity Icu 36 kA (400 V∿)
	3P	4P	In (A)
1	254 40	254 45	40
1	254 41	254 46	100
1	254 42	254 47	160
1	254 43	254 48	250
			Breaking capacity Icu 70 kA (400 V∿)
1	254 50	254 55	40
1	254 51	254 56	100
1	254 52	254 57	160
1	254 53	254 58	250

Electronic earth leakage modules

Can be fitted onto DPX/DPX-I 250
Adjustable, sealable sensitivity: 0.03 - 0.3 - 1 - 3 A
Adjustable, time delay: 0 - 0.3 - 1 - 3 s
Test push-buttons
Reset push-button
Remote earth fault signalling contact
Switch for mechanical tests (installation insulation test)
Mounted underneath

Pack	Cat.Nos 3P	Cat.Nos 4P	
			Standard
	3P	4P	In (A)
1		260 51	160
1	260 54	260 55	250
			LED version
			Monitors the isolation state of the installation via a series of LEDs
		4P	In (A)
1		260 53	160
1		260 57	250

Plug-in version

A plug-in is a DPX fitted with tulip contacts mounted on a base

Pack	Cat.Nos 3P	Cat.Nos 4P	
			Tulip contacts
1	265 29	265 30	Set of tulip contacts (supplied with an incoming/outgoing protective cover)
			Bases for DPX only
			Accept DPX/DPX-I fitted with tulip contacts
1	265 31	265 32	Front terminal mounting base
1	265 33	265 34	Rear terminal mounting base with threaded rod
1	265 35	265 36	Flat rear terminal mounting base
			Bases for DPX with earth leakage module
		4P	
1		265 37	Front terminal mounting base
1		265 38	Rear terminal mounting base with threaded rod
1		265 39	Flat rear terminal mounting base
			Accessories
1		263 99	Set of connectors (8-pin)
1		098 19	Set of connectors (6-pin)
1		263 43	Set of 2 extractor handle

Draw-out version

A DPX draw-out version is a plug-in DPX fitted with a "Debro-lift" mechanism which can be used to withdraw the DPX while keeping it on its base

Pack	Cat.Nos 3P	Cat.Nos 4P	
			"Debro-lift" mechanism
			Supplied with a rigid slide and handle for drawing-out
	3P	4P	
1	265 45	265 46	For DPX base only
1		265 47	For DPX base with earth leakage module
			Key lock for "Debro-lift" mechanism
			Enable locking of DPX in drawn-out position
1		265 76	1 key Ronis for DPX only
1		265 78	1 key Ronis for motorised DPX or with rotary handle
			Accessories for "Debro-lift" mechanism
1		265 75	Isolated handle for drawing-out
1		265 74	Signalling contact (plugged-in/drawn-out)

Supply invertor type

A supply invertor type is composed of one plate with interlock for 2 devices

Pack	Cat.Nos	
1	264 08	Universal plate for MCCB or trip-free switch fixed version
1	264 03	Universal plate for MCCB or trip-free switch plug-in and draw-out version

For DPX-L 250 100 kA and Sg electronic release version, please consult us

Red catalogue numbers: New products

DPX™ 250
equipment and accessories

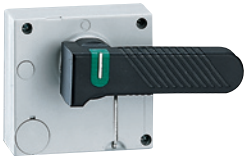
262 22

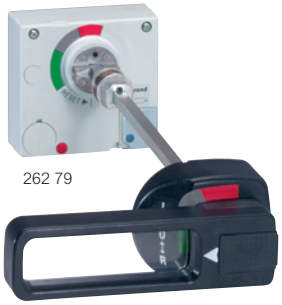
262 79

262 80

261 30

Pack	Cat.Nos	Rotary handles
		Direct on DPX
1	262 22	Standard (grey)
1	262 24	For emergency use (red/yellow) - can be fitted on Cat.Nos 262 22, 262 41 or 262 81
		Vari-depth handle IP 55
		Comprising: connection rod, bracket, self-adhesive drilling template, mounting accessories and door lock mechanism
1	262 79	Standard (black)
1	262 80	Conversion kit for emergency use Can be fitted on Cat.No 262 79
		Locking accessories
1	262 92	Eurolocks for vari-depth handle
1	262 93	Profalux for vari-depth handle
1	262 94	Ronis for vari-depth handle
1	262 25	Eurolocks for direct handle

		Motor-driven handles
		Front operated
1	261 30	24 V∿/⎓
1	261 34	230 V∿
		Accessory
1	261 59	Ronis locking accessory

Pack	Cat.Nos		Accessories
			Insulated shields
1	262 30		Set of 3
	3P	4P	**Sealable terminal shields**
1	262 26	262 27	Set of 2 long terminal shields
1	262 28	262 29	Set of 2 short terminal shields
			Padlock
1	262 21		For locking in "open" position
			Cage terminals
1	262 35		Set of 4 terminals for cable 185 mm² max. (rigid) or 150 mm² max. (flexible)
			Adaptor for lug
			For connecting bare cables with wide lug
1	262 31		Set of 1 adaptor + insulated shields
			Extended front terminals
1	262 32		Set of 4
	3P	4P	**Spreaders**
1	262 33	262 34	Set of spreaders incoming or outgoing
			Rear terminals
			Used to convert the fixed version with front terminals to the fixed version with rear terminals
1	263 31	263 32	Set of rear terminals, incoming or outgoing
1	265 27	265 28	Set of flat rear terminals, incoming or outgoing
			Distribution terminal 250 A
1	048 68		250 A - 4 outputs 35 mm² flexible and 2 outputs 25 mm² flexible - Isc peak 36 kÂ Can be fitted directly onto downstream terminal of DPX 250/250 ER and DPX-IS 250

DPX™ 630

thermal magnetic and electronic release MCCBs from 250 to 630 A

255 37

Dimensions (p. 58)
Electrical characteristics (p. 62-63)

Moulded case MCCBs for switching, control isolation and protection of low voltage electrical lines
Can be fitted with auxiliaries (p. 42)
Can be used with earth leakage modules or with residual current relays (p. 43)
Supplied complete with:
- connection plates for bars
- terminal shields
Conform to IEC 60947-2 - Sealable adjustment
Can be mounted on plate in XL³ cabinets and enclosures

Thermal magnetic MCCBs - fixed version

Thermal adjustable from 0.8 to 1 In
Magnetic adjustable from 5 to 10 In

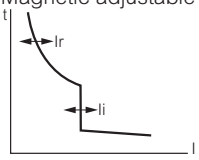

Breaking capacity Icu 36 kA (400 V∿)

Pack	Cat.Nos 3P	Cat.Nos 4P	In (A)
1	255 21	255 36	250
1	255 22	255 37	320
1	255 23	255 38	400
1	255 25	255 39	500
1	255 24	255 40	630

Pack	Cat.Nos 3P + N/2	In (A)
1	255 32	320
1	255 33	400
1	255 35	500
1	255 34	630

Breaking capacity Icu 70 kA (400 V∿)

Pack	Cat.Nos 3P	Cat.Nos 4P	In (A)
1	255 42	255 57	320
1	255 43	255 58	400
1	255 45	255 59	500
1	255 44	255 60	630

Pack	Cat.Nos 3P + N/2	In (A)
1	255 52	320
1	255 53	400
1	255 55	500
1	255 54	630

DPX 630 electronic release S1

Adjustment of Ir, Isd (p. 63)
Instantaneous protection If = 5 kA
Green indicator lamp
Connector for test unit
Dynamic selectivity
4P version: adjustement of neutral on front panel

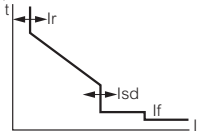

Breaking capacity Icu 36 kA (400 V∿)

Pack	Cat.Nos 3P	Cat.Nos 4P	In (A)
1	256 01	256 05	250
1	256 02	256 06	400
1	256 03	256 07	630

Breaking capacity Icu 70 kA (400 V∿)

Pack	Cat.Nos 3P	Cat.Nos 4P	In (A)
1	256 10	256 14	400
1	256 11	256 15	630

DPX™ 630
thermal magnetic and electronic release MCCBs from 250 to 630 A (continued)

DPX™ 630

256 35

260 63

Pack	Cat.Nos 3P	Cat.Nos 4P	
			Electronic release S2 MCCBs - fixed version
			Adjustment of Ir, Isd, Tr, Tsd (opposite) Instantaneous protection If = 5 kA Green indicator lamp Connector for test unit Logic and dynamic selectivity 4P version: adjustement of neutral on front panel
			Breaking capacity Icu 36 kA (400 V∿)
			In (A)
1	256 26	256 30	250
1	256 27	256 31	400
1	256 28	256 32	630
			Breaking capacity Icu 70 kA (400 V∿)
			In (A)
1	256 35	256 39	400
1	256 36	256 40	630
			Breaking capacity Icu 100 kA (400 V∿)
			In (A)
1	256 43	256 47	400
1	256 44	256 48	630

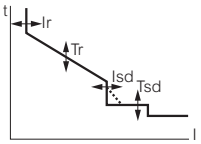

Pack	Cat.Nos 3P	Cat.Nos 4P	
			Earth leakage modules
			Can be fitted onto DPX/DPX-I 630 Adjustable, sealable sensitivity: 0.03 - 0.3 - 1 - 3 A Adjustable, time delay: 0 - 0.3 - 1 - 3 s Test push-button Reset push-button Remote earth fault signalling contact Switch for mechanical tests (installation insulation test) Mounted underneath 230-500 V∿
			Standard
	3P	4P	In
1	260 60	260 61	400 A
1	260 64	260 65	630 A
			LED version
			Monitors the isolation state of the installation via a series of LEDs
		4P	In
1		260 63	400 A
1		260 67	630 A

For DPX-L 630 100 kA and Sg electronic release version, please consult us

■ Performance data

S1 - Adjustment of Ir, Isd

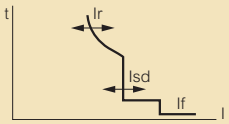

• Long delay protection against overloads with an adjustable threshold based on the rms value of the current:
Ir = 0.4 - 0.5 - 0.7 - 0.8 - 0.95 - 1 x In (8 steps)
Tr = 5 s (fixed at 6 tr)
• Short delay protection against short-circuits with an adjustable Im threshold:
Isd = 1.5 - 2 - 3 - 4 - 5 - 6 - 8 - 10 x Ir (8 steps)
Tsd = 0.05 s (fixed)
• Instantaneous protection
if with fixed threshold: If = 5 kA

S2 - Adjustment of Ir, Tr, Isd, Tsd

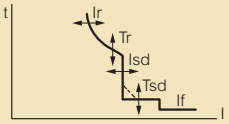

• Long delay protection against overloads with an adjustable threshold based on the rms value of the current:
Ir = 0.4 - 0.5 - 0.7 - 0.8 - 0.9 - 0.95 - 1 x In (8 steps)
Tr = 5 - 10 - 20 - 30 s (at 6 Ir) (4 steps)
• Short delay protection against short-circuits with an adjustable Isd threshold:
Isd = 1.5 - 2 - 3 - 4 - 5 - 6 - 8 - 10 x Ir (8 steps)
Tsd = 0 - 0.1 - 0.2 - 0.3 s (4 steps)
Tsd = 0.01 - 0.1 - 0.2 - 0.3 s at 12 x Ir (I2 t constant) (4 steps)
• Instantaneous protection against short-circuits
with fixed threshold: If = 5 kA

DPX™ 630
equipment and accessories

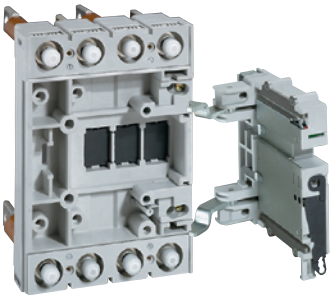
265 57

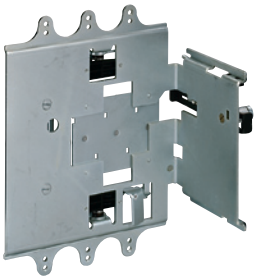
265 67

262 50

262 51

262 48

Pack	Cat.Nos 3P	Cat.Nos 4P	Plug-in version
			A plug-in is a DPX fitted with tulip contacts mounted on a base
			Tulip contacts
1	265 50	265 51	Set of tulip contacts (supplied with an incoming/outgoing protective cover)
			Bases for DPX only
			Accept DPX/DPX-I fitted with tulip contacts
1	265 52	265 53	Front terminal mounting base
1	265 54	265 55	Rear terminal mounting base with threaded rod
1	265 56	265 57	Flat rear terminal mounting base
	4P		**Bases for DPX with earth leakage module**
1	265 58		Front terminal mounting base
1	265 59		Rear terminal mounting base with threaded rod
1	265 60		Flat rear terminal mounting base
			Accessories
1	263 68		Set of 2 extractor handle
1	263 99		Set of connectors (8-pin)

Pack	Cat.Nos 3P	Cat.Nos 4P	Draw-out version
			A DPX draw-out version is a plug-in DPX fitted with a "Debro-lift" mechanism which can be used to withdraw the DPX while keeping it on its base
			"Debro-lift" mechanism
			Supplied with a rigid slide and handle for drawing-out
1	265 66	265 67	For DPX base only
1		265 68	For DPX base with earth leakage module
			Key-lock for "Debro-lift" mechanism
			Enable locking of DPX in drawn-out position
1	265 76		1 key Ronis for DPX only
1	265 78		1 key Ronis for motorised DPX or with rotary handle
			Accessories for "Debro-lift" mechanism
1	265 75		Isolated handle for drawing-out
1	265 74		Signalling contact (plugged-in/drawn-out)

Pack	Cat.Nos	Supply invertor type
		Factory assembled
		A supply invertor type is composed of one plate with interlock for 2 devices
1	264 09	Plate for MCCB or trip-free switch fixed version
1	264 04	Plate for MCCB or trip-free switch plug-in and draw-out version

Pack	Cat.Nos	Rotary handles
		Direct on DPX
1	262 41	Standard (grey)
1	262 24	For emergency use (red/yellow) - can be fitted on Cat.Nos 262 22, 262 41 or 262 81

Pack	Cat.Nos	Rotary handles (continued)
		Vari-depth handle IP 55
		Comprising: connection rod, bracket, self-adhesive drilling template, mounting accessories and door lock mechanism
1	262 81	Standard (grey)
1	262 82	For emergency use (red/yellow) can be fitted on Cat.Nos 262 81 or 262 41
		Locking accessories
1	262 92	Eurolocks for vari-depth handle
1	262 93	Profalux for vari-depth handle
1	262 94	Ronis for vari-depth handle
1	262 25	Eurolocks for direct handle

Pack	Cat.Nos	Motor-driven handles
		Front operated
1	261 40	24 V∿/⎓
1	261 44	230 V∿
		Accessory
1	261 59	Ronis locking accessory

Pack	Cat.Nos 3P	Cat.Nos 4P	Accessories
			Insulated shields
1	262 30		Set of 3
	3P	4P	**Sealable terminal shields**
1	262 44	262 45	Set of 2
			Padlock
1	262 40		For locking in "OPEN" position
			Cage terminals
1	262 50		Set of 4 terminals for cable 300 mm² max. (rigid) or 240 mm² max. (flexible)
1	262 51		Set of 4 high-capacity terminals for cable 2 x 240 mm² (rigid) or 2 x 185 mm² (flexible)
			Adaptor for lug
			For connecting bare cables with wide lugs
1	262 46		Set of 4 adaptors + insulated shields
			Extended front terminals
1	262 47		Set of 4
	3P	4P	**Spreaders**
1	262 48	262 49	Set of incoming or outgoing spreaders
			Rear terminals
			Used to convert the fixed version with front terminals to the fixed version with rear terminals
1	263 50	263 51	Set of incoming or outgoing swivel terminals
1	263 52	265 53	Set of incoming or outgoing flat terminals

DPX™ 1250 and 1600

thermal magnetic and electronic release MCCBs from 800 to 1600 A

258 16

258 23

Dimensions (p. 59)
Electrical characteristics (p. 62-63)

Moulded case MCBs for switching, control isolation and protection of low voltage electrical lines
Can be fitted with auxiliaries (integrated terminal blocks)
Can be used with earth leakage modules or with residual current relays (p. 43)
Supplied complete with:
- connection plates for bars
- terminal shields
Conform to IEC 60947-2
Fixed version - Sealable adjustment

Thermal magnetic MCCBs - fixed version

Thermal adjustable from 0.8 to 1 In
Magnetic adjustable from:
5 to 10 In

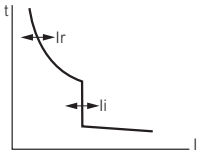

Pack	Cat.Nos 3P	Cat.Nos 4P	In (A)
			Breaking capacity Icu 50 kA (400 V∿)
1	258 02	258 09(1)	800
1	258 03	258 10(1)	1000
1	258 04	258 11(1)	1250
			Breaking capacity Icu 70 kA (400 V∿)
			In (A)
1	258 16	258 23(1)	800
1	258 17	258 24(1)	1000
1	258 18	258 25(1)	1250

Electronic release S1 MCCBs - fixed version

Adjustment of Ir, Isd
Instantaneous protection If = 20 kA (for In 1600 A)
Indicator lamp
Minimum current for indicator lamp operation (20 % In): green:
normal;
fixed red: I ≥ 0.9 Ir;
flashing red: I ≥ 1.05 Ir
Connector for test unit
Dynamic selectivity

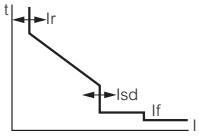

Pack	Cat.Nos 3P	Cat.Nos 4P	In (A)
			Breaking capacity Icu 50 kA (400 V∿)
1	257 02	257 06(2)	800
1	257 03	257 07(2)	1250
1	257 04	257 08(2)	1600
			Breaking capacity Icu 70 kA (400 V∿)
			In (A)
1	257 10	257 14(2)	800
1	257 11	257 15(2)	1250
1	257 12	257 16(2)	1600

Electronic release S2 MCCBs - fixed version

Adjustment of Ir, Isd, Tr, Tsd
Instantaneous protection If = 20 kA (for In 1600 A)
Indicator lamp
Minimum current for indicator lamp operation (20 % In): green:
normal;
fixed red: I ≥ 0.9 Ir;
flashing red: I ≥ 1.05 Ir
Connector for test unit
Logic and dynamic selectivity

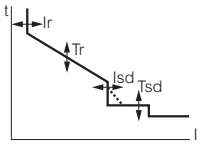

Pack	Cat.Nos 3P	Cat.Nos 4P	In (A)
			Breaking capacity Icu 50 kA (400 V∿)
1	257 26	257 30(2)	800
1	257 27	257 31(2)	1250
1	257 28	257 32(2)	1600
			Breaking capacity Icu 70 kA (400 V∿)
			In (A)
1	257 34	257 38(2)	800
1	257 35	257 39(2)	1250
1	257 36	257 40(2)	1600

For DPX-L 1250 100 kA and Sg electronic release version, please consult us

(1) Neutral without protection
(2) Neutral settings 0 - 0.5 - 1 N (0 - 50% - 100% Neutral)

DPX™ 1600
equipment and accessories

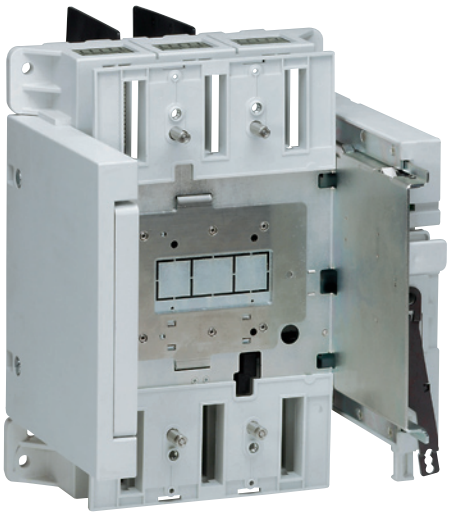
265 84 (supplied assembled)

262 60

262 70

262 67 + 262 68

Pack	Cat.Nos 3P	Cat.Nos 4P	Draw-out version
			A DPX draw-out version is a plug-in DPX fitted with a "Debro-lift" mechanism which can be used to withdraw the DPX while keeping it on its base
			Draw-out base
			Base for DPX 1600 supplied with "Debro-lift" assembled a rigid slide and handle for drawing-out
1	265 82	265 83	Front terminals
1	265 84	265 85	Rear terminals
			Key lock for "Debro-lift" mechanism
			Enable locking of DPX in drawn-out position
1	265 76		One key Ronis for DPX only
1	265 80		Two key Ronis (one key supplied) for motorised DPX or with rotary handle
			Accessories for "Debro-lift" mechanism
1	265 75		Isolated handle for drawing-out
1	265 74		Signalling contact (plugged-in/drawn-out)

Pack	Cat.Nos	Supply invertor type
		A supply invertor type is composed of one plate with interlock for 2 devices
1	264 10	Plate for MCCBs or trip-free switch fixed version
1	264 05	Plate for MCCBs or trip-free switch plug-in and draw-out version

Pack	Cat.Nos	Rotary handles
		Direct on DPX
1	262 61	Standard (black)
		Vari-depth handle IP 55
		Comprising: connection rod, bracket, self-adhesive drilling template, mounting accessories and door lock mechanism
1	262 83	Standard (black)
1	262 84	For emergency use (red/yellow)
		Locking accessories
1	262 92	Eurolocks for vari-depth handle
1	262 93	Profalux for vari-depth handle
1	262 94	Ronis for vari-depth handle
1	262 25	Eurolocks for direct handle

Pack	Cat.Nos	Motor-driven handles
		Factory assembled
		Front operated
1	261 54	230 V∿
		For DPX1600 up to 1250 A
		Front operated
1	261 24	24 V∿/⎓
1	261 25	48 V∿/⎓
1	261 23	230 V∿/⎓
		For DPX1600 In = 1600 A
1	261 19	24 V∿/⎓
1	261 28	48 V∿/⎓
1	261 27	230 V∿/⎓
		Locking accessory for motor-driven handles
1	261 59	Ronis locking accessory
1	261 58	Profalux locking accessory

Pack	Cat.Nos	Accessories
		Insulated shields
		Used to isolate the connections between each pole
1	262 66	Set of 3
	3P / 4P	**Sealable terminal shields**
1	262 64 / 262 65	Set of 2
		Padlock
1	262 60	For locking in "open" position
		Cage terminals
1	262 69	Set of 1 terminal for cables without lug 2 x 240 mm² for rigid cable or 2 x 185 mm² for flexible cable
1	262 70	Set of 1 high-capacity terminal for cables without lug 4 x 240 mm² for rigid cable 4 x 185 mm² for flexible cable
		Extended front terminals
		Set of 4
1	262 67	Short terminals for 630 - 1250 A (2 bars max. per pole)
1	262 68	Long terminals for 1600 A (3 bars max. per pole)
	3P / 4P	**Spreaders**
1	262 73 / 262 74	Set of incoming or outgoing spreaders
		Rear terminals
		Used to convert the fixed version with front terminals to the fixed version with rear terminals
		Set of incoming or outgoing rear terminals
1	263 80 / 263 82	Short terminals
1	263 81 / 263 83	Long terminals

Red catalogue numbers: New products

DPX™ auxiliaries
for DPX, DPX-I and DPX-IS

261 85

261 93

Pack	Cat.Nos	
		Auxiliary contact or fault signal
1	261 60	For signalling the state of the contacts or opening of the MCCB on a fault For DPX/DPX-I/DPX-IS Changeover switch 3 A - 240 V∿
		Releases
		Allow remote tripping of a DPX
		Shunt releases For DPX-IS/DPX-I and DPX Shunt inrush power 300 VA
1	261 64	Coil voltage 24 V∿/⎓
1	261 65	Coil voltage 48 V∿/⎓
1	261 66	Coil voltage 110 V∿/⎓
1	261 67	Coil voltage 230 V∿/⎓
1	261 68	Coil voltage 400 V∿/⎓

	For DPX-IS 250, 630	For DPX-I, DPX 250 to 1600 and DPX-IS 1600	
			Undervoltage releases For DPX-IS/DPX-I and DPX Undervoltage power consumption 5 VA
1	261 70	261 80	Coil voltage 24 V⎓
1	261 71	261 81	Coil voltage 24 V∿
1	261 72	261 82	Coil voltage 48 V⎓
1	261 76	261 86	Coil voltage 110 V∿
1	261 73	261 83	Coil voltage 230 V∿
1	261 74	261 84	Coil voltage 400 V∿

Time-lag (ms) undervoltage releases
Allow remote tripping of a DPX
Prevent false tripping in the event of AC supply microbreaks
Require a time-lag module connected to the undervoltage releases below

			Number of modules
1	261 90	Time-lag modules 230 V∿	3
1	261 91	Time-lag modules 400 V∿	3
1	261 75	Undervoltage releases For DPX -IS 250, 630	
1	261 85	Undervoltage releases For DPX 250 to 1600 and DPX-IS 1600	

		Electronic test unit
1	261 97	Test connector and software for connecting DPX to a PC Supplied with test software
		Automation control unit
		For setting the conditions for supply inversion, generator on loft status acquisition for DMX and DPX circuit-breakers, open/closed Power supply: 230 V∿ and 12-24-48 V⎓ Connection by plug-in terminals
1	261 93	Standard unit
1	261 94	Communicating unit, enabling data transmission (RS 485 port)

DPX™ auxiliaries
for DPX, DPX-I and DPX-IS

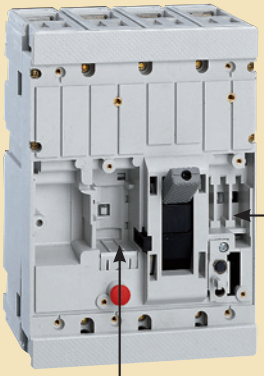

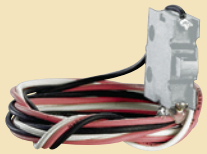

Auxiliary contact or fault signal
A single Cat.No 261 60 auxiliary contact or fault signal

Undervoltage releases

Shunt releases

Time-lag undervoltage releases

Max. number of contacts per DPX-IS device

	Device	Auxiliary contact AC	EBAC	FS	Shunt release or undervoltage release
Without release	DPX-IS 250	1	2	–	–
With release	DPX-IS 250	1	1	1	1

AC = auxiliary contact
EBAC = "early" auxiliary contact
FS = break on trip contact

Max. number of contacts per DPX device

Device	Auxiliary contact AC	FS	Shunt release or undervoltage release
DPX 250	2	1	1
DPX 630	2	2	1
DPX 1600	3	1	1

residual current relay and coils

residual current relay and coils

260 88

260 98

260 93 coil for use with relay

Add residual current protection to DPX³/DPX trip-free switches and DPX³/DPX MCCBs equipped with release

Pack	Cat.Nos	Residual current relay for DPX/DPX³	Number of modules
		Detects fault currents, and, when used with a shunt trip or an undervoltage release, it gives the trip command to a MCCB or a switch • Comprises: - a tinged, sealable window - an auxiliary contact - a green Led indicating energisation - 3 yellow Leds indicating respectively the max. phase earth insulation current: 20, 40 and 60 % - a red Led indicating Fixed: exceeding of the insulation fault current value Flashing: breaking of one of the connections between coils and relays • For use with coils: - Ø35 and 80 mm Adjustable sensitivity: 0.03, 0.05, 0.075, 0.1, 0.15, 0.2, 0.3, 0.5, 0.75, 1, 1.5, 2, 3, 5, 7.5, 10, 15, 20, 30 A - Ø110 to 210 mm Adjustable sensitivity: 0.3, 0.5, 0.75, 1, 1.5, 2, 3, 5, 7.5, 10, 15, 20, 30 A - Ø150 mm Adjustable sensitivity: 0.5, 0.75, 1, 1.5, 2, 3, 5, 7.5, 10, 15, 20, 30 A - Ø300 mm Adjustable sensitivity: 1, 1.5, 2, 3, 5, 7.5, 10, 15, 20, 30 A • Adjustable trip: 0, 0.15, 0.25, 0.5, 1, 2.5, 5 seconds • Supply voltage: 230/240 V - 50/60 Hz	
1	260 88	Residual current relay to clip on rail ⊔	2

		Coils
		For use with residual current relay Cat.No 260 88 1 coil per DPX, DPX-I and DPX³
1	260 92	Coil Ø35 mm - 160 A max.
1	260 93	Coil Ø80 mm - 400 A max.
1	260 94	Coil Ø110 mm - 600 A max.
1	260 95	Coil Ø140 mm - 1200 A max.
1	260 96	Coil Ø210 mm - 1800 A max.
1	260 97	Coil Ø150 mm - open - 1200 A max.
1	260 98	Coil Ø300 mm - open - 2000 A max.

Viking 3 disconnector block for measurement 1 connection

With its accessories, allows intervention (measurement, maintenance, etc) on a current, voltage and power measuring circuit by keeping the current transformer secondary circuit closed

		Colour	Nominal cross section (mm²)	Capacity rigid wire (mm²)	Capacity Flexible wire (mm²)	Pitch (mm)
25	371 92	Grey	4	0.25 to 4	0.25 to 4	8

■ Residual current relay

Cat.No 260 88

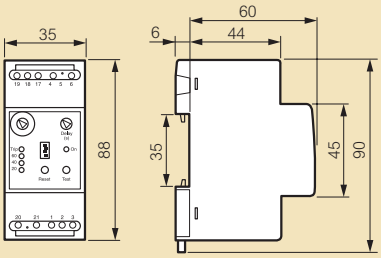

■ Coils

Cat.Nos 260 92/93/94/95/96

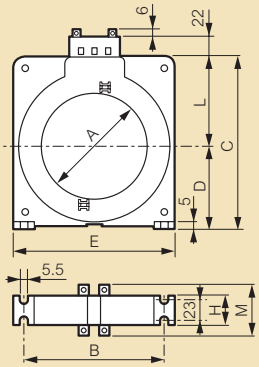

Cat.No 260 97

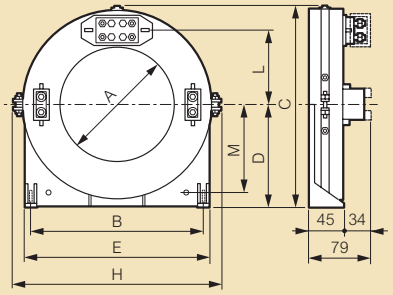

Cat.Nos	A	B	C	D	E	H	L	M
260 92	35	75	85	42	92	36	43	56
260 93	80	108	132	67	125	36	65	56
260 94	110	148	170	86	165	36	84	56
260 95	140	177	206	104	200	36	102	56
260 96	210	270	295	150	290	44	145	64
260 97	150	225	259	133	245	275	95	113

Cat.No 260 98

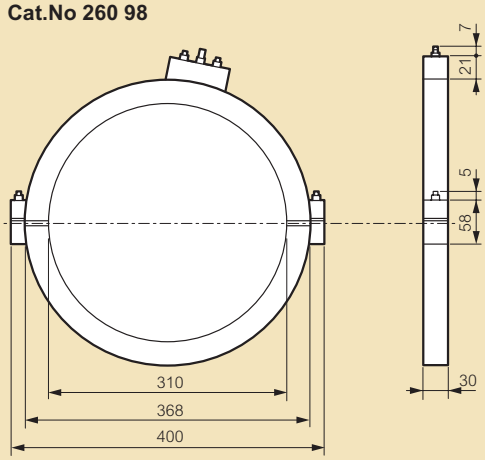

DPX³/DPX magnetic only
motor protection MCCBs up to 400 A

420 713

Dimensions (see opposite)

For switching, control isolation and protection of three-phase motors
Conform to IEC 60947-2

Pack	Cat.Nos	DPX³ 160
		Fixed magnetic Can be mounted on rail ⊔ or on plate in XL³ cabinets and enclosures Supplied with cage terminals 70 mm² max. (flexible cable) and up to 95 mm² max. with accessory Can be fitted with auxiliaires (p. 32)
		Breaking capacity Icu 16 kA (400 V∿)
	3P	In (A)
1	420 710	16
1	420 711	25
1	420 712	50
1	420 713	63
		Breaking capacity Icu 25 kA (400 V∿)
1	420 714	16
1	420 715	25
1	420 716	50
1	420 717	63

Pack	Cat.Nos	DPX³ 250
		Adjustable magnetic Can be mounted on rail ⊔ or on plate in XL³ cabinets and enclosures Supplied with cage terminals 120 mm² max. (flexible cable) and up to 150 mm² max. with accessory Can be fitted with auxiliaires (p. 32)
		Breaking capacity Icu 36 kA (400 V∿)
	3P	In (A)
1	420 718	100
1	420 719	160
1	420 720	200
1	420 721	250
		Breaking capacity Icu 25 kA (400 V∿)
1	420 722	100
1	420 723	160
1	420 724	200
1	420 725	250

Pack	Cat.Nos	DPX 630 electronic
		Adjustable Can be mounted on plate in XL³ cabinets and enclosures Can be fitted with auxiliaires (p. 42)
		Breaking capacity Icu 36 kA (400 V∿)
	3P	In (A)
1	420 726	320
1	420 727	400
		Breaking capacity Icu 70 kA (400 V∿)
1	420 728	320
1	420 729	400

Red catalogue numbers: New products

DPX-I™ trip-free switches
125 to 1600 A

420 299

253 99

Dimensions (p. 54 to 59)

Trip-free switches for on-load circuit breaking and isolation of low voltage electrical circuits
Can be associated to earth leakage modules or to corresponding DPX residual current relays (p. 43)
Mount on rail ⊔ up to DPX³ 250 with plate Cat.No 421 072 (DPX³-I 160) and Cat.No 421 071 (DPX³ 250)
Conform to IEC 60947-3
Category of use AC 23 A
Connection identical to corresponding DPX

Pack	Cat.Nos 3P	Cat.Nos 4P	
			DPX³-I 160
	3P	4P	In (A)
1	420 198	420 199	160
	4P with earth leakage module		
1	420 197		160
			DPX³-I 250
	3P	4P	In (A)
1	420 299	420 300	250
	4P with earth leakage module		
1	420 298		250
			DPX-I 250
	3P	4P	In (A)
1	253 98	253 99	250
			DPX-I 630
	3P	4P	In (A)
1	255 86	255 87	400
1	255 88	255 89	630
			DPX-I 1600
	3P	4P	In (A)
1	257 94	257 95	800
1	257 96	257 97	1250
1	257 98	257 99	1600

Common auxiliaries to DPX³ (p. 32) **and DPX** (p. 42)

DPX-I™ trip-free switches
125 to 1600 A

■ Electrical characteristics

	DPX³-I 160	DPX³-I 250	DPX-I 250	DPX-I 630	DPX-I 1600
Rated operating voltage Ue (V) 50/60 Hz	690(1)	690(1)	690	690	690
Rated operating voltage Ue (V) direct	250	250	250	250	250
Rated insulation voltage Ui (V∿)	800	800	690	690	690
Rated impulse withstand voltage Uimp (kV)	8	8	8	8	8
Rated closing capacity on 400 V short-circuit Icm (kA)	3	3	4.3	13	40
Short-time resistive current t = 1 s Icw (kA)	1.7	1.7	2.5	7.6	20
Endurance (o.c cycle) mechanical	25000	25000	20000	15000	10000
Endurance (o.c cycle) electrical	8000	8000	8000	5000	2000(2)
Conventional thermal current (A)	160	250	250	630	1600
Nominal current of use (A) AC 23 A (690 V∿)	160 (160 V)	250 (250 V)	250	630	1600
DC 23 A (250 V∿)	160	160	250	630	-

(1) 500 V for DPX³ - I with earth leakage module
(2) Up to 1250 A

■ Dimensions

Dimensions of DPX-I identical to corresponding DPX

DPX-I	Dimensions
DPX³-I 160	DPX³ 160 (see p. 54)
DPX³-I 250	DPX³ 250 (see p. 55)
DPX-I 250	DPX 250 (see p. 57)
DPX-I 630	DPX 630 (see p. 58)
DPX-I 1600	DPX 1600 (see p. 59)

■ Choice of faceplates and distribution equipment

Equipment of DPX-I identical to corresponding DPX³/DPX:

Devices	XL³ 400	XL³ 800	XL³ 4000
DPX³/DPX³-I 160	(p. 46)	(p. 48)	(p. 50)
DPX³/DPX³-I 250	(p. 46)	(p. 48)	(p. 50)
DPX/DPX-I 250	(p. 46)	(p. 48)	(p. 52)
DPX/DPX-I 630	(p. 46)	(p. 48)	(p. 52)
DPX/DPX-I 1600		(p. 48)	(p. 52)

Red catalogue numbers: New products

XL³ 400
equipment selection

Device	Fixing	Position	Configuration	Fixing plate
FIXING ON PLATE				
DPX³ 160 (Combination possible with DPX³ 250)	Cabinet or enclosure	vertical	with or without integrated e.l.c.bs and without side motor operator	202 11 + 421 071
			with or without integrated e.l.c.bs and with side motor operator	202 11 + 421 068
			direct rotary handle(1)	202 09
			manual supply invertor(2)	202 11 + 421 058
		horizontal	with or without integrated e.l.c.bs	202 13
	Cable sleeve	vertical	with or without integrated e.l.c.bs	202 17
DPX³ 250 (Combination possible with DPX³ 160)	Cabinet or enclosure	vertical	with or without integrated e.l.c.bs and without side motor operator	202 11 + 421 072
			with or without integrated e.l.c.bs and with side motor operator	202 11 + 421 069
			direct rotary handle(1)	202 09
			manual supply invertor(2)	202 11 + 421 058
		horizontal	with or without integrated e.l.c.bs	202 15
	Cable sleeve	vertical	with or without integrated e.l.c.bs	202 17
DPX 250	Cabinet or enclosure	vertical	1 to 2 devices, no e.l.c.bs	202 20
			device only in central position	202 21
			1 to 2 devices, with downstream e.l.c.bs	202 22
			with centred downstream e.l.c.bs	202 23
		horizontal	with or without downstream e.l.c.bs	202 24
	Cable sleeve	vertical	device only	202 28
			with downstream e.l.c.bs	202 29
DPX 630	Cabinet or enclosure	vertical	1 device, no e.l.c.bs	202 20
			device only in central position	202 21
			1 device, with e.l.c.bs	202 22
			with centred downstream e.l.c.bs	202 23
		horizontal	device only	202 25
	Cable sleeve	vertical	device only	202 28
			with downstream e.l.c.bs	202 29

(1) Use curved doors only
(2) When the MCCB is fixed at the top or at the bottom of the enclosure, use 200 mm height faceplate Cat.No 202 15
(3) When the MCCB is equipped with terminal shields, use 400 mm height faceplate Cat.No 203 11
(4) When the MCCB is equipped with terminal shields, use 400 mm height faceplate Cat.No 203 17

Red catalogue numbers: New products

Faceplate for devices		
Height (mm)	Metal	Insulating
300	203 10	203 60
300	203 10	203 60
300	203 09	-
300	203 10	203 60
150	203 13	203 65
300	203 18	-
300	203 10	203 60
300	203 10	203 60
300	203 09	-
300	203 10	203 60
200	203 17	203 66
300	203 18	-
400	203 20	203 70
400	203 21	203 71
600	203 22	203 72
600	203 23	203 73
200	203 24	203 74
400	203 28	-
800	203 29	-
400	203 20	203 70
400	203 21	203 71
600	203 22	203 72
600	203 23	203 73
300	203 25	-
400	203 28	-
800	203 29	-

202 11
Fixing plate equipped with a rail ⊔ for mounting DPX³ with fixing adaptor
For vertical mounting

202 13
Fixing plate for DPX³ 160 thermal-magnetic
For horizontal mounting

203 10
1/4 turn metal faceplate for DPX³ in vertical position
Height 300 mm

203 13
1/4 turn metal faceplate for DPX³ 160 in vertical position
Height 150 mm

202 20
Fixing plate for 1 to 2 DPX 250 or 1 DPX 630 and 1 DPX 250
For vertical mounting

202 24
Fixing plate for 1 DPX 250 with or without e.l.c.bs
For horizontal mounting

203 20
1/4 turn metal faceplate for 1 to 2 DPX 250 or 1 DPX 630 and 1 DPX 250
For vertical mounting
Height 400 mm

203 24
1/4 turn metal faceplate for 1 DPX 250 with or without e.l.c.bs
For horizontal mounting
Height 200 mm

202 17
Fixing plate for DPX³ 160 and DPX³ 250
For vertical mounting

203 18
1/4 turn metal faceplate for DPX³
Height 300 mm

Red catalogue numbers: New products

XL³ 800
equipment selection

Device	Fixing	Position	Configuration
	XL³ 800 - 24 modules		
FIXING ON PLATE			
DPX³ 160 (Combination possible with DPX³ 250)	Cabinet or enclosure	vertical	without side motor operator
			with side motor operator
			direct rotary handle
			manual supply invertor
			automatic supply invertor
		horizontal	with or without integrated e.l.c.bs
DPX³ 250 and DPX³ 160-125 electronic release (Combination possible with DPX³ 160)	Cabinet or enclosure	vertical	without side motor operator
			with side motor operator
			direct rotary handle
			manual supply invertor
			automatic supply invertor
		horizontal	with or without integrated e.l.c.bs
DPX 250 (Combination possible with DPX 630)	Cabinet or enclosure	vertical	1 to 3 devices, no e.l.c.bs
			1 to 3 devices with downstream e.l.c.bs
			supply inversor + motor operators
		horizontal	with or without downstream e.l.c.bs
			with or without downstream e.l.c.bs + motor operators
DPX 630 (Combination possible with DPX 250)	Cabinet or enclosure	vertical	1 to 3 devices, no e.l.c.bs
			1 to 3 devices with downstream e.l.c.bs
		horizontal	with or without downstream e.l.c.bs
DPX 1600	Cabinet or enclosure	vertical	device only
		horizontal	device only
	XL³ 800 - 36 modules		
FIXING ON PLATE			
DPX³ 160	Cabinet or enclosure	vertical	without side motor operator
			with side motor operator
			manual supply invertor
DPX³ 250	Cabinet or enclosure	vertical	without side motor operator
			with side motor operator
			manual supply invertor
DPX 250	Cabinet or enclosure	vertical	no e.l.c.bs
			with downstream e.l.c.bs
DPX 630	Cabinet or enclosure	vertical	no e.l.c.bs
			with downstream e.l.c.bs
DPX 1600	Cabinet or enclosure	vertical	device only
			device only

206 11

Fixing plate equipped with a rail ⊔ for DPX³, vertical mounting

206 17

Fixing plate for DPX³ 250, horizontal mounting

208 13

1/4 turn metal faceplate DPX³ 160, horizontal mounting

Fixing plate	Faceplate for devices		
	Height (mm)	1/4 turn	screw
XL³ 800 - 24 modules			
206 11 + 421 071	300	208 10	209 10
206 11 + 421 068	300	208 10	209 10
206 08 + 421 071	300	208 05	209 05
206 11 + 421 058	300	208 10	209 10
206 13 + 420 558	300	208 10	209 10
206 15	150	208 13	209 13
206 11 + 421 072	300	208 10(2)	209 10
206 11 + 421 069	300	208 10(2)	209 10
206 08 + 421 072	300	208 05	209 05
206 11 + 421 058	300	208 10(2)	209 10
206 13 + 421 058	300	208 10(2)	209 10
206 17	200	208 17	209 17
206 20	400	208 20	209 20
206 22	600	208 22	209 22
206 68(1)	400	-	-
206 24	200	208 24	209 24
206 21	200	-	209 24
206 20	400	208 20	209 20
206 22	600	208 22	209 22
206 23	300	208 23	209 21
206 30	400	208 30	209 30
206 30	400	208 34	209 34
XL³ 800 - 36 modules			
206 61 + 421 071	300	-	209 60
206 61 + 421 068	300	-	209 60
206 61 + 420 559	300	-	209 60
206 61 + 421 072	300	-	209 60
206 61 + 421 072	300	-	209 60
206 61 + 420 559	300	-	209 60
206 70	400	-	209 70
206 72	600	-	209 72
206 70	400	-	209 70
206 72	600	-	209 72
206 80	400	-	209 80
206 80	400	-	209 84

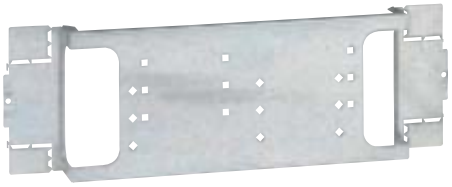

206 24

Fixing plate for DPX 250 with or without e.l.c.bs, horizontal mounting

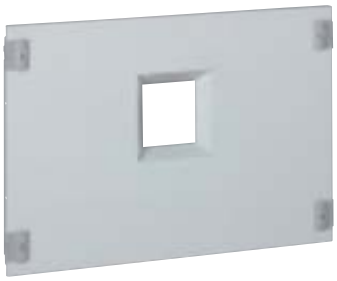

208 34

1/4 turn metal faceplate DPX 1600, horizontal mounting

(1) Faceplate supplied with the kit
(2) When the MCCB is equipped with terminal shields, use 400 mm height faceplate Cat.No 209 27

Red catalogue numbers: New products

XL³ 4000
equipment selection

Device	Version	Position	Configuration	Connection terminals
FIXING ON PLATE				
DPX³ 160 (Combination possible with DPX³ 250)	fixed	vertical	without side motor-operator	front
			with side motor-operator	front
			without front motor-operator	front or rear
			with front motor-operator	front or rear
			with rotary handle	front
				front or rear
			manual supply invertor	front
				front or rear
			automatic supply invertor	front
				front or rear
		horizontal	-	front
			with or without front motor-operator	front or rear
	draw-out	vertical	with or without front motor-operator	front or rear
			with rotary handle	front or rear
			manual or automatic supply invertor	front or rear
		horizontal	with or without front motor-operator	front or rear
DPX³ 250 (Combination possible with DPX³ 160 thermal-magnetic)	fixed	vertical	without side motor-operator	front
			with side motor-operator	front
			without front motor-operator	front or rear
			with front motor-operator	front or rear
			with rotary handle	front
				front or rear
			manual supply invertor	front
				front or rear
			automatic supply invertor	front
				front or rear
		horizontal	-	front
			with or without front motor-operator	front or rear
	draw-out	vertical	with or without front motor-operator	front or rear
			with rotary handle	front or rear
			manual or automatic supply invertor	front or rear
		horizontal	with or without front motor-operator	front or rear

206 11

Fixing plate equipped with a rail ⊔ for DPX³, vertical mounting

421 071

Rail fixing adaptor for DPX³

206 17

Fixing plate for DPX³ 250, horizontal mounting

XL³ 4000 - 24 modules							XL³ 4000 - 36 modules				
Spacer	Fixing device	Plate	Metal faceplate				Fixing device	Plate	Metal faceplate		
			Height (mm)	1/4 turn	Screw	Lock			Height (mm)	Screw	Lock
-	-	206 11 + 421 071	300	208 10	209 10	-	-	206 61 + 421 071	300	209 60	-
-	-	206 11 + 421 068	300	208 10	209 10	-	-	206 61 + 421 068	300	209 60	-
207 50	207 90	207 49	300	208 10	209 10	-	207 61	207 49	300	209 60	-
-	207 90	207 49	300	208 10	209 10	-	207 61	207 49	300	209 60	-
-	-	206 08 + 421 071	300	208 05	209 05	-	-	-	-	-	-
207 50	207 90	207 49	300	208 05	209 05	-	207 61	207 49	300	209 65	-
-	-	206 11 + 421 058	300	208 10	209 10	-	-	-	-	-	-
207 50	206 63	206 71	300	208 10	209 10	-	-	-	-	-	-
-		206 13 + 421 058	300	208 10	209 10	-	-	-	-	-	-
-	206 63	206 71	300	208 10	209 10	-	-	-	-	-	-
-	-	206 15	150	208 13	209 13	-	-	-	-	-	-
	-	207 94	150	208 13	209 13	-	-	-	-	-	-
207 50	207 91	207 59	400	-	-	212 11	-	-	-	-	-
	207 91	207 59	400	-	-	212 08	-	-	-	-	-
207 50	206 69	206 81	400	-	-	212 11	-	-	-	-	-
	-	207 95	200	-	-	212 13	-	-	-	-	-
-	-	206 11 + 421 072	300	208 10	209 10	-	-	206 61 + 421 072	300	209 60	-
-	-	206 11 + 421 069	300	208 10	209 10	-	-	206 61 + 421 069	300	209 60	-
-	207 90	207 64	300	208 10	209 10	-	207 61	207 49	300	209 60	-
207 50	207 90	207 64	300	208 10	209 10	-	207 61	207 49	300	209 60	-
207 50	-	206 08 + 421 072	300	208 05	209 05	-	-	-	-	-	-
207 50	207 90	207 64	300	208 05	209 05	-	207 61	207 49	300	209 65	-
-	-	206 11 + 421 058	300	208 10	209 10	-	-	-	-	-	-
207 50	206 63	206 73	300	208 10	209 10	-	-	-	-	-	-
-		206 13 + 421 058	300	208 10	209 10	-	-	-	-	-	-
-	206 63	206 73	300	208 10	209 10	-	-	-	-	-	-
-	-	206 17	200	208 17	209 17	-	-	-	-	-	-
	-	207 96	200	208 17	209 17	-	-	-	-	-	-
207 50	207 91	207 69	400	-	-	212 11	-	-	-	-	-
	207 91	207 69	400	-	-	212 08	-	-	-	-	-
207 50	206 69	206 83	400	-	-	212 11	-	-	-	-	-
	-	207 97	200	-	-	212 13	-	-	-	-	-

208 10

1/4 turn metal faceplate for DPX³ 160 and DPX³ 250, vertical mounting
Height 300 mm

209 10

Screw metal faceplate for DPX³ 160 and DPX³ 250, vertical mounting
Height 300 mm

208 13

1/4 turn metal faceplate for DPX³ 160, horizontal mounting on adjustable fixing plate
Height 150 mm

212 11

Lock metal faceplate for 1 to 3 DPX3 160 or DPX³ 250 draw-out version, vertical mounting
Height 400 mm

Red catalogue numbers: New products

XL³ 4000
equipment selection

Device	Version	Position	Configuration	Connection terminals	Rotary handle/ motor-driven
DPX 250	fixed	vertical	1 to 3 devices, no e.l.c.bs	front	-
			1 to 3 devices, no e.l.c.bs	front or rear	with or without
			1 to 3 devices with e.l.c.bs	front	-
			1 to 3 devices with e.l.c.bs	front or rear	with or without
		horizontal	with or without downstream e.l.c.bs	front	-
			with or without downstream e.l.c.bs	front or rear	with or without
		vertical	supply inverters	front or rear	with or without motor-driven
	plug-in	vertical	1 to 3 devices, no e.l.c.bs	front or rear	with or without
			1 to 3 devices, with e.l.c.bs	front or rear	with or without
		horizontal	with or without downstream e.l.c.bs	front or rear	with or without
	draw-out	vertical	no e.l.c.bs	front or rear	with or without rotary handle
			no e.l.c.bs	front or rear	motor-driven
			with e.l.c.bs	front or rear	with or without rotary handle
			with e.l.c.bs	front or rear	motor-driven
		horizontal	with or without downstream e.l.c.bs	front or rear	with or without rotary handle
			with or without e.l.c.bs	front or rear	motor-driven
		vertical	supply inverters	front or rear	-
			supply inverters	front or rear	motor-driven
DPX 630	fixed	vertical	1 to 3 devices, no e.l.c.bs	front	-
			1 to 3 devices, no e.l.c.bs	front or rear	with or without
			1 to 3 devices, with e.l.c.bs	front	-
			1 to 3 devices, with e.l.c.bs	front or rear	with or without
		horizontal	with or without downstream e.l.c.bs	front	-
			with or without downstream e.l.c.bs	front or rear	with or without
		vertical	supply inverters	front or rear	with or without motor-driven
	plug-in	vertical	1 to 2 devices, no e.l.c.bs	front or rear	with or without
			1 to 2 devices, with e.l.c.bs	front or rear	with or without
		horizontal	with or without downstream e.l.c.bs	front or rear	with or without rotary handle
	draw-out	vertical	no e.l.c.bs	front or rear	with or without rotary handle
			no e.l.c.bs	front or rear	motor-driven
			with e.l.c.bs	front or rear	with or without rotary handle
			with e.l.c.bs	front or rear	motor-driven
		horizontal	with or without downstream e.l.c.bs	front or rear	with or without rotary handle
			with or without downstream e.l.c.bs	front or rear	motor-driven
		vertical	supply inverters	front or rear	-
			supply inverters	front or rear	motor-driven
DPX 1600	fixed	vertical	no e.l.c.bs	front	-
			no e.l.c.bs	front	rotary handle or motor-driven
			no e.l.c.bs	rear	-
			no e.l.c.bs	rear	rotary handle or motor-driven
		horizontal	no e.l.c.bs	front	-
			no e.l.c.bs	front	motor-driven
			no e.l.c.bs	rear	motor-driven
			no e.l.c.bs	rear	-
			no e.l.c.bs	rear	rotary handle
		horizontal	supply inverters	front or rear	-
			supply inverters	front or rear	motor-driven
	draw-out	vertical	no e.l.c.bs	front	-
			no e.l.c.bs	front	rotary handle or motor-driven
		horizontal	no e.l.c.bs	front	-
			no e.l.c.bs	rear	rotary handle or motor-driven
			supply inverters	rear	-
			supply inverters	rear	motor-driven

(1) No height spacer if motor-driven
(2) 2 sets of spacers for adjustable plate
(3) NB: New catalogue numbers starting from June 2011, please contact us

XL³ 4000 - 24 modules							XL³ 4000 - 36 modules				
Spacer	Fixing device	Plate	Metal faceplate				Fixing device	Plate	Faceplate		
			Height (mm)	1/4 turn	Screw	Lock			Height (mm)	Screw	Lock
	-	206 20	400	208 20	209 20	-	-	206 70	400	209 70	-
207 50[1]	207 20	207 75	400	208 20	209 20	-	207 70	207 75	400	209 70	-
	-	206 22	600	208 22	209 22	-	-	206 72	600	209 72	-
207 50[1]	207 22	207 76	600	208 22	209 22	-	207 72	207 76	600	209 72	-
	-	206 24	200	208 24	209 24	-	-	-	-	-	-
	-	207 24	200	-	209 24	-	-	-	-	-	-
207 50[1]	-	206 74	400	-	209 74	-	-	-	-	-	-
	207 21	207 77	400	-	-	212 20	-	-	-	-	-
	207 23	207 78	600	-	-	212 22	-	-	-	-	-
	-	207 27	200	-	-	212 24	-	-	-	-	-
207 50	207 21	207 77	400	-	-	212 21	-	-	-	-	-
207 50	207 21	207 77	400	-	-	212 02	-	-	-	-	-
207 50	207 23	207 78	600	-	-	212 23	-	-	-	-	-
207 50	207 23	207 78	600	-	-	212 03	-	-	-	-	-
	-	207 26	300	-	-	212 26	-	-	-	-	-
	-	207 26	300	-	-	212 27	-	-	-	-	-
207 50	-	206 74	400	-	-	212 90	-	-	-	-	-
207 50	-	206 74	400	-	-	212 91	-	-	-	-	-
	-	206 20	400	208 20	209 20	-	-	206 70	400	209 70	-
207 50[1]	207 20	207 85	400	208 20	209 20	-	207 70	207 85	400	209 70	-
	-	206 22	600	208 22	209 22	-	-	206 72	600	209 72	-
207 50[1]	207 22	207 86	600	208 22	209 22	-	207 72	207 86	600	209 72	-
	-	206 23	300	208 23	209 21	-	-	-	-	-	-
	-	207 93	300	-	209 23	-	-	-	-	-	-
207 50[1]	-	206 74	400	-	209 76	-	-	-	-	-	-
	207 21	207 87	400	-	-	212 20	-	-	-	-	-
	207 23	207 88	600	-	-	212 22	-	-	-	-	-
	-	207 98	300	-	-	212 17	-	-	-	-	-
207 50	207 21	207 87	400	-	-	212 21	-	-	-	-	-
207 50	207 21	207 87	400	-	-	212 04	-	-	-	-	-
207 50	207 23	207 88	600	-	-	212 23	-	-	-	-	-
207 50	207 23	207 88	600	-	-	212 05	-	-	-	-	-
	-	207 98	300	-	-	212 18	-	-	-	-	-
	-	207 98	300	-	-	212 19	-	-	-	-	-
207 50	-	206 76	400	-	-	212 94	-	-	-	-	-
207 50	-	206 76	400	-	-	212 95	-	-	-	-	-
	-	206 30[3]	400	208 30[3]	209 30[3]	-	-	206 80[3]	400	209 80[3]	-
207 50[1][2]	-	207 30[3]	400	-	209 32[3]	-	-	-	-	-	-
207 50[1][2]	-	207 32[3]	400	208 30[3]	209 30[3]	-	-	207 82[3]	400	209 80[3]	-
207 50[1][2]	-	207 32[3]	400	-	209 32[3]	-	-	-	-	-	-
	-	206 30	400	208 34	209 34	-	-	206 80	400	209 84	-
	-	206 30	400	-	209 36	-	-	-	-	-	-
	-	206 30	400	-	209 35	-	-	-	-	-	-
207 50[1][2]	-	207 36	400	208 34	209 34	-	-	-	-	-	-
207 50[1][2]	-	207 36	400	-	209 35	-	-	-	-	-	-
	-	206 86	800	-	209 86	-	-	-	-	-	-
	-	206 86	800	-	209 87	-	-	-	-	-	-
	-	207 31	400	-	-	212 31	-	-	-	-	-
	-	207 31	400	-	-	212 32	-	-	-	-	-
	-	207 35	400	-	-	212 34	-	-	-	-	-
	-	207 35	400	-	-	212 35	-	-	-	-	-
	-	206 87	800	-	-	212 36	-	-	-	-	-
	-	206 87	800	-	-	212 37	-	-	-	-	-

DPX³ 160 thermal magnetic

Dimensions

Fixed version

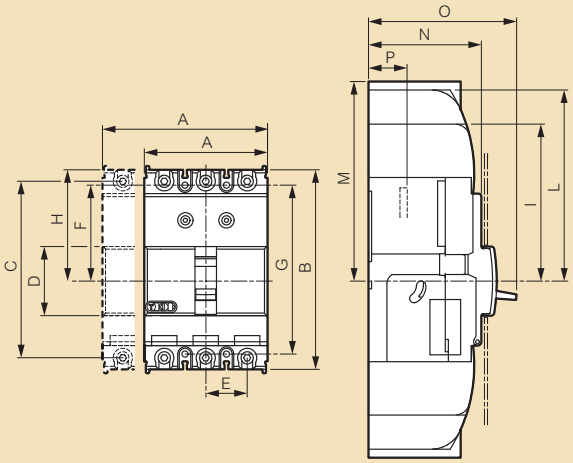

	A	B	C	D	E	F	G	H	I	L	M	N	O	P
3P	81	130	115	45	27	62,5	110	72,5	102,5	125	-	74	100	18
4P	108	130	115	45	27	62,5	110	72,5	102,5	125	-	74	100	18
e.l.c.bs	108	160	145	45	27	62,5	140	72,5	102,5	125	-	74	100	18

Fixed version with earth leakage module

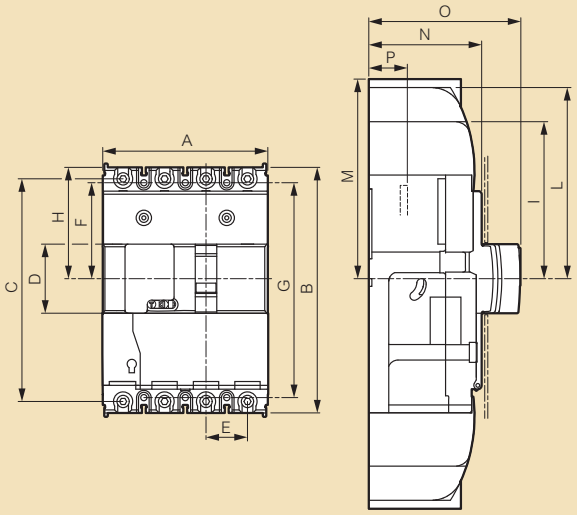

Plug-in version

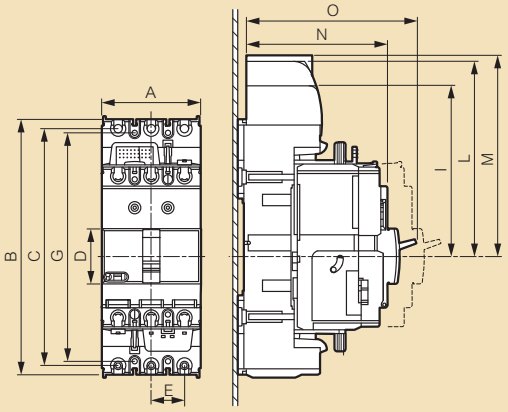

	A	B	C	D	E	F	G	H	I	L	M	N	O	P
3P	81	208	193	45	27	100,5	186	111,5	141,5	164	-	122	148	-
4P	108	238	223	45	27	100,5	216	111,5	141,5	164	-	122	148	-
e.l.c.bs	108	230	223	45	27	100,5	216	111,5	141,5	164	-	122	148	-

Plug-in version with earth leakage module

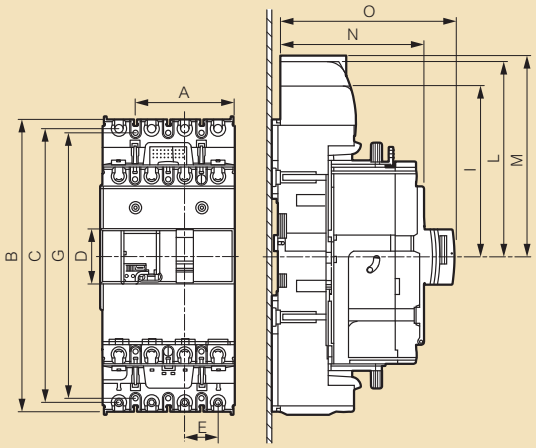

DPX³ 250 thermal magnetic and electronic release

Dimensions

Fixed version

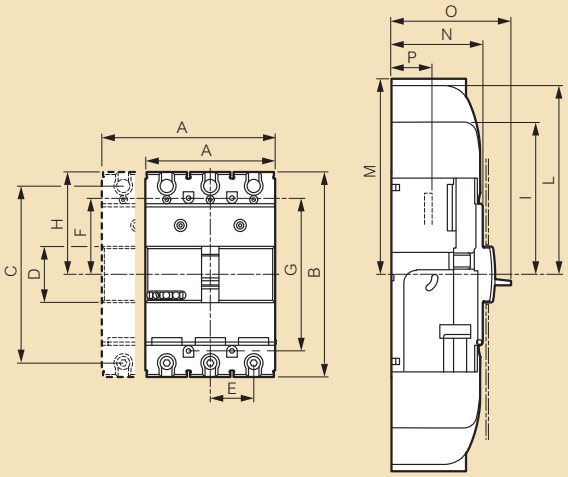

	A	B	C	D	E	F	G	H	I	L	M	N	O	P
3P	105	165	142,5	45	35	61,5	123	82,5	112,5	150	-	74	100	18
4P	140	165	142,5	45	35	61,5	123	82,5	112,5	150	-	74	100	18
e.l.c.bs	140	195	172,5	45	35	61,5	153	82,5	112,5	150	-	74	100	18

Fixed version with earth leakage module

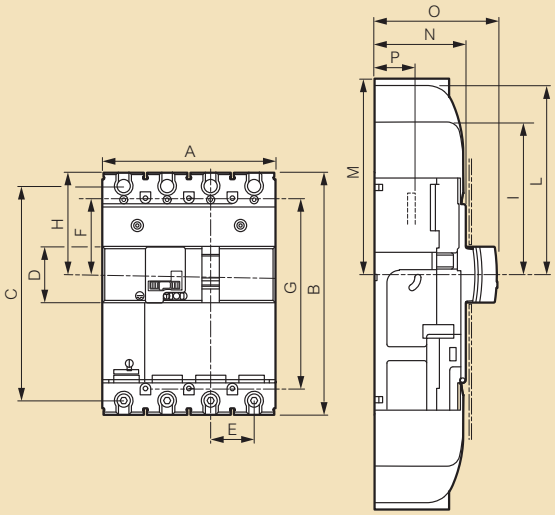

Plug-in version

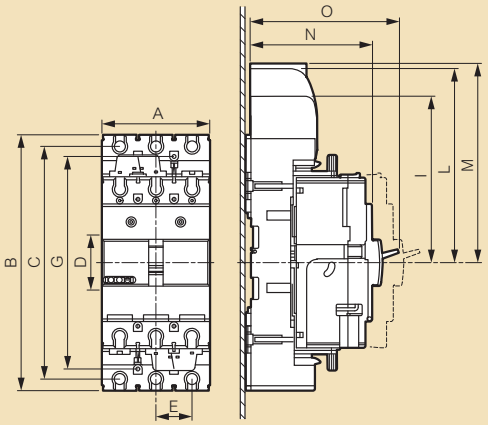

	A	B	C	D	E	F	G	H	I	L	M	N	P
3P	105	248	225,5	45	35	103	206	150	180	217,5	-	122	148
4P	140	278	225,5	45	35	103	236	150	180	217,5	-	122	148
e.l.c.bs	140	278	225,5	45	35	103	236	150	180	217,5	-	122	148

Plug-in version with earth leakage module

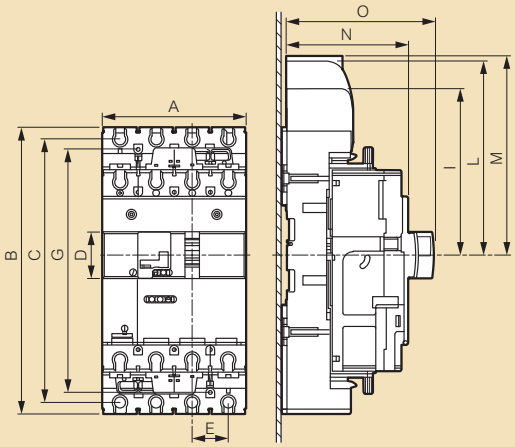

DPX³ 160/250 accessories

Dimensions

Direct rotary handles Cat.Nos 421 000/001/002/003

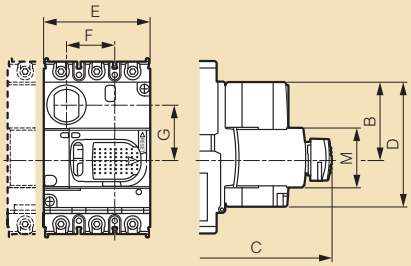

	A	B	C	D	E	F	G	H min	H max	I	L	M
160	122	57	155	94	80,5	36,5	41,7	132	361	62	74	45
160 with e.l.c.bs	122	57	155	94	93	36,5	41,7	132	361	62	74	45
250	122	57	155	94	80,5	40,5	41,7	132	361	62	74	45
250 with e.l.c.bs	122	57	155	94	93	40,5	41,7	132	361	62	74	45
250 electronic release	122	57	155	94	93	40,5	41,7	132	361	62	74	45
250 electronic release with e.l.c.bs	122	57	155	94	93	40,5	41,7	132	361	62	74	45

Vari-depth rotary handles Cat.Nos 421 004/005

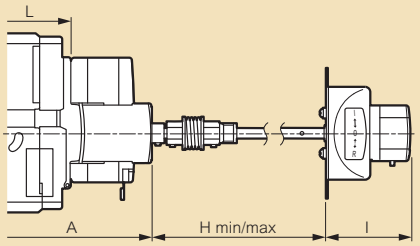

Front motor-driven handle Cat.No 421 061

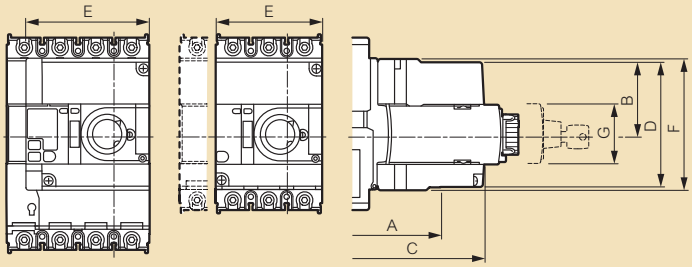

	A	B	C	D	E	F	G	H
160	125	54,5	154	94	80,5	99	45	74
160 with e.l.c.bs	125	54,5	154	94	93	99	45	74
250	125	54,5	154	94	80,5	99	45	74
250 with e.l.c.bs	125	54,5	154	94	93	99	45	74
250 electronic release	125	54,5	154	94	93	99	45	74
250 electronic release with e.l.c.bs	125	54,5	154	94	93	99	45	74

Rear terminals Cat.Nos 421 036/037/038/039

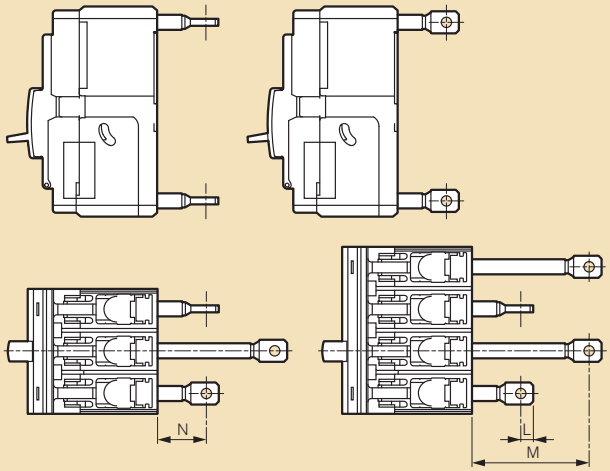

Incoming spreaders Cat.Nos 421 032/033/034/035

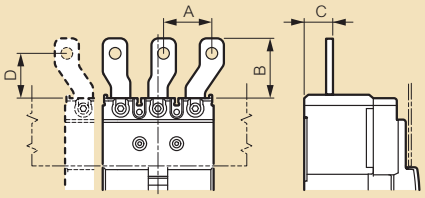

	A	B	C	D
160	35	41	23	33
160 with e.l.c.bs	35	41	23	33
250	48,5	55	23	39
250 with e.l.c.bs	48,5	55	23	39

■ Dimensions

Fixed version, front terminals

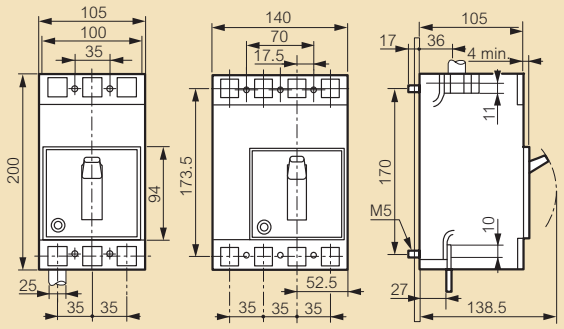

Fixed version with earth leakage module mounted underneath(1)

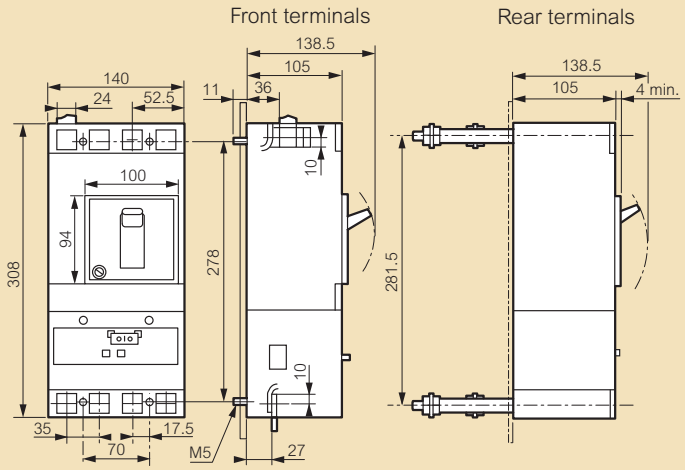

Plug-in version, front terminals

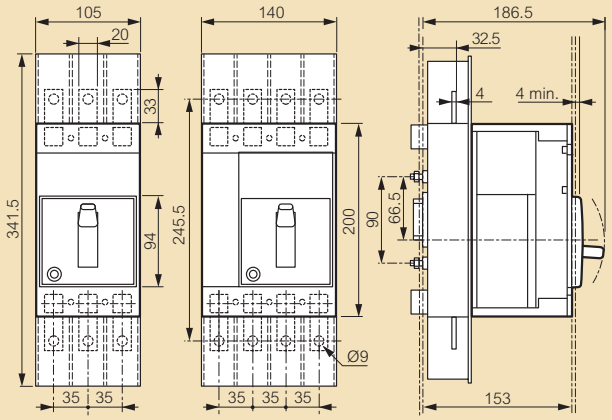

Plug-in version, rear terminals

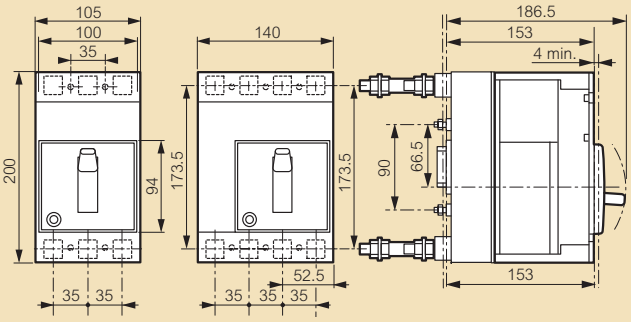

Draw-out version, front terminals

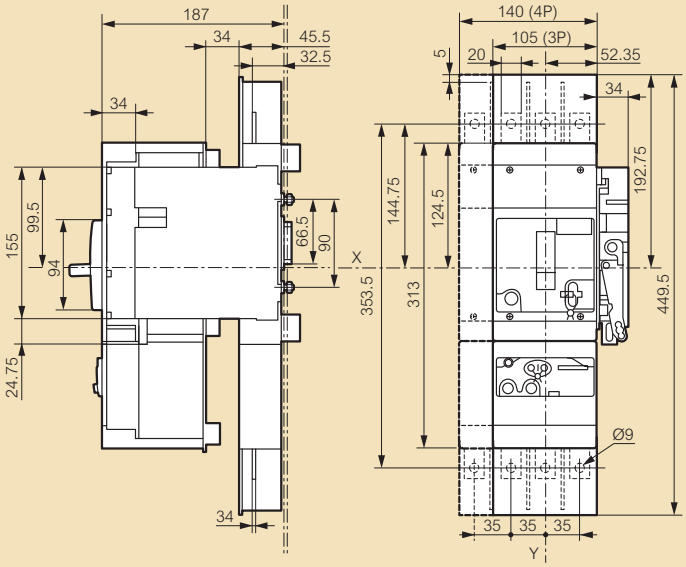

Draw-out version, rear terminals

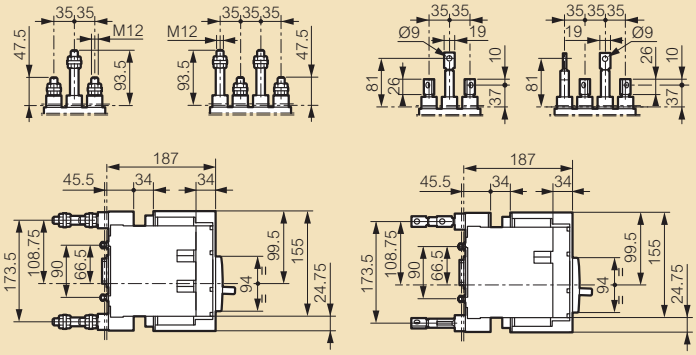

Rotary handle-direct on DPX

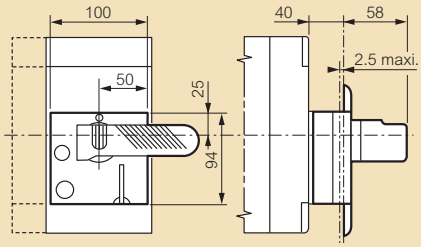

Terminal shields

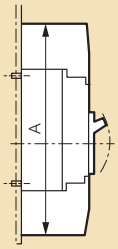

	A
DPX 250	330
DPX 250 + earth leakage module	438

Rotary handle-vari-depth on door

Mounting with flexible seal

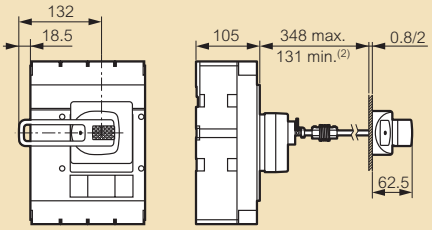

(1) Dimensions of 3-pole earth leakage modules are the same as 4-pole earth leakage modules
(2) 75 mm without mechanical system

■ Dimensions

Fixed version, front terminals

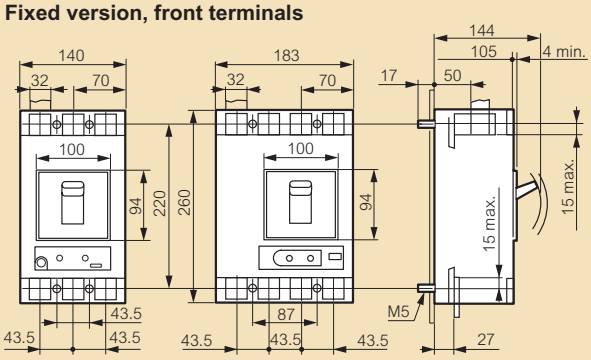

Fixed version with earth leakage module mounted underneath

Front terminals Rear terminals

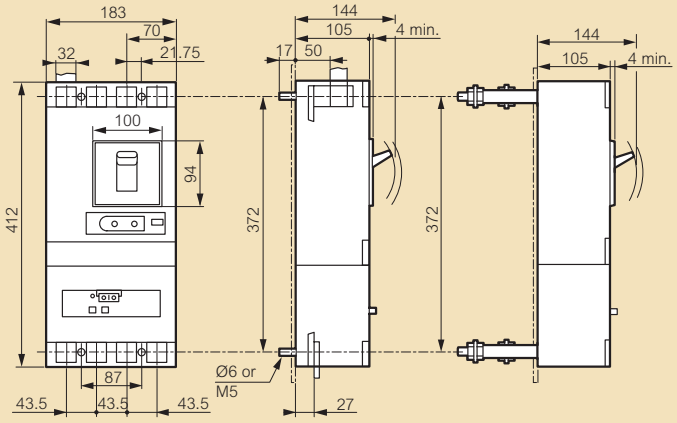

Plug-in version, front terminals

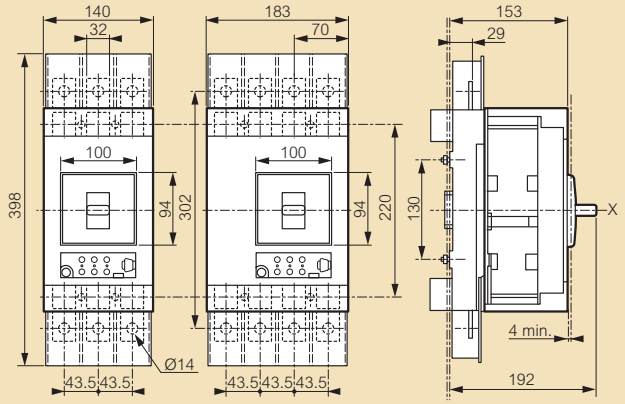

Plug-in version, rear terminals

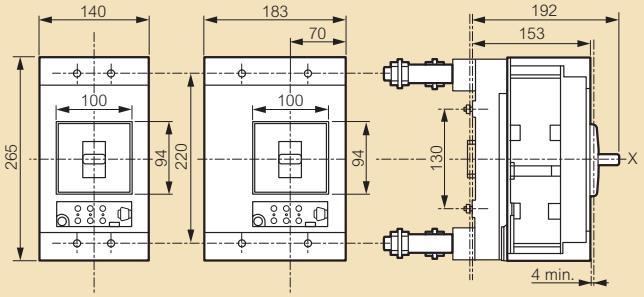

Draw-out version, front terminals

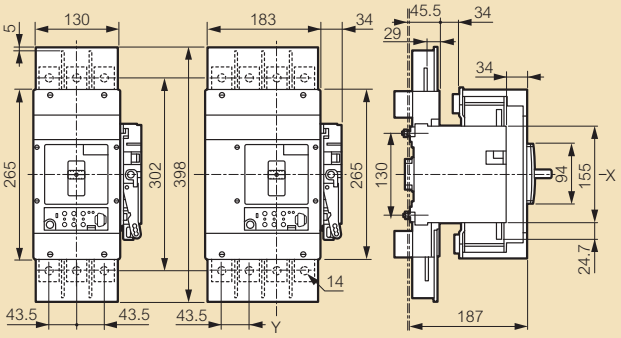

Draw-out version, rear terminals

Rear terminal with threaded rod

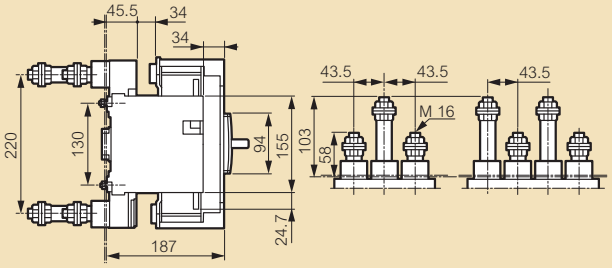

Flat rear terminal

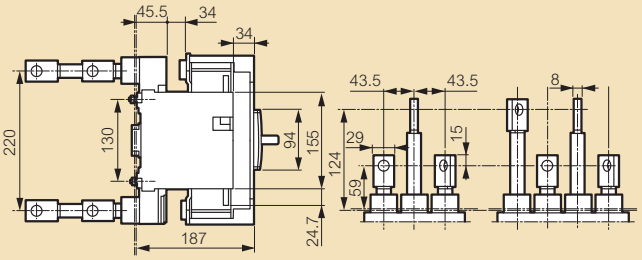

Rotary handle-direct on DPX

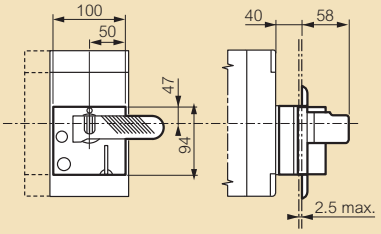

Terminal shields

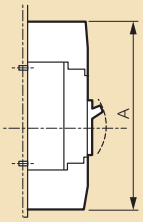

	A
DPX 630	390
DPX 630 + earth leakage module	542

Rotary handle-vari-depth handle on door

Mounting with flexible seal

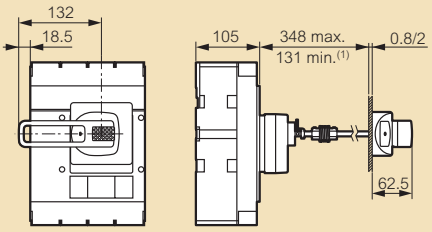

(1) 75 mm without mechanical system

DPX™ 1600

■ Dimensions

Fixed version, front terminals

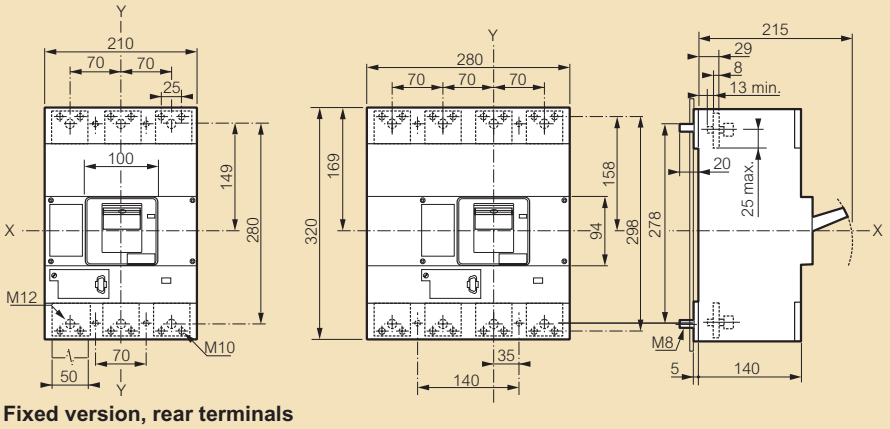

Fixed version, rear terminals

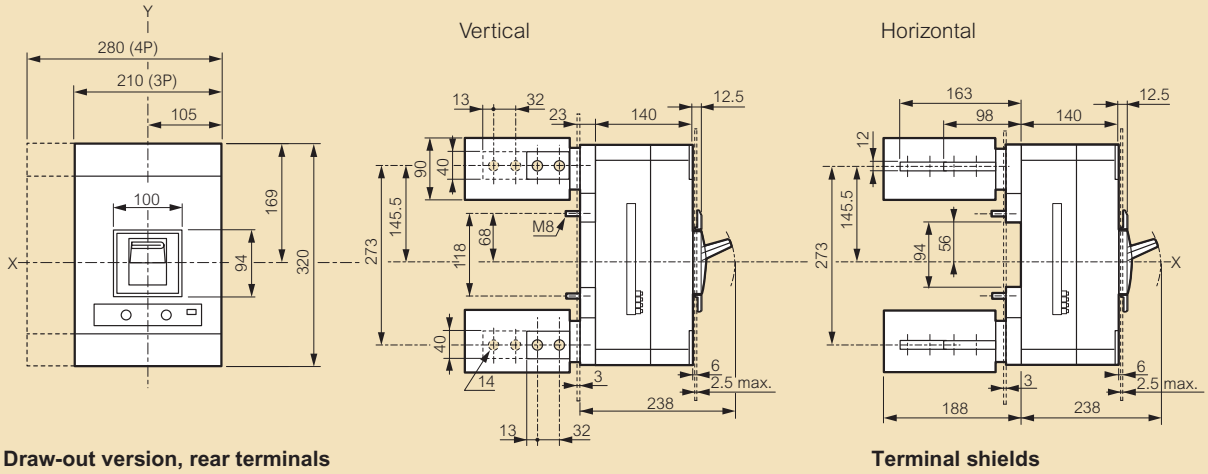

Draw-out version, rear terminals

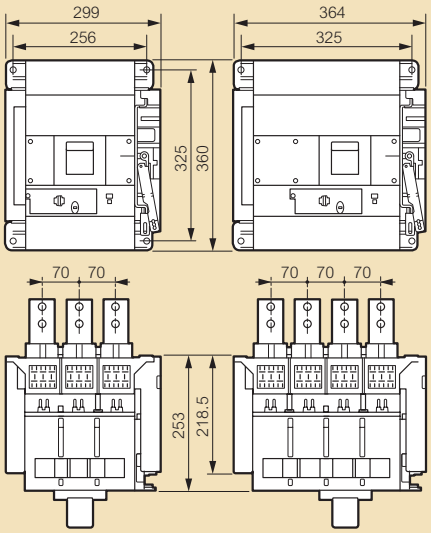

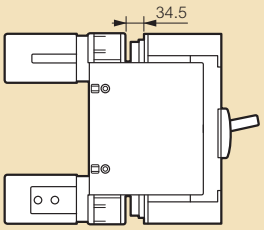

Terminal shields

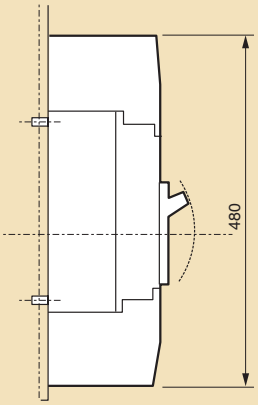

Rotary handle-direct on DPX

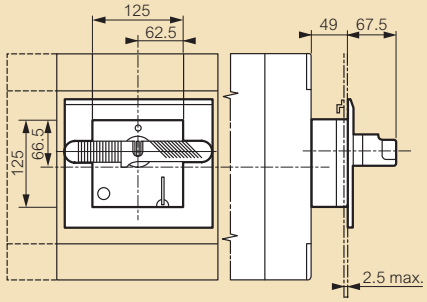

Rotary handle-vari-depth handle on door

Mounting with flexible seal

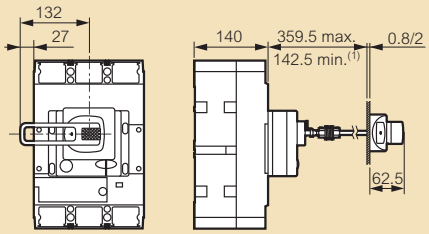

(1) 75 mm without mechanical system

■ Technical characteristics (at 40°)

MCCBs		DPX³ 160 thermal magnetic				DPX³ 160 with electronic earth leakage module			
		16 kA	25 kA	36 kA	50 kA	16 kA	25 kA	36 kA	50 kA
Nominal current In (A)		16-25-40-63-80-100-125-160				16-25-40-63-80-100-125-160			
Rated insulation voltage (V)	50-60Hz	800				600			
Rated operational voltage (V)	50-60Hz	690				500			
	Continuous	500				500			
Rated impulse withstand current Uimp (kV)		8				8			
Category of use		A				A			
Ultimate breaking capacity (kA) in AC	220/240 V∿	25	35	50	65	25	35	50	65
	380/415 V∿	16	25	36	50	16	25	36	50
	440 V∿	10	18	25	30	10	18	25	30
	480/500 V∿	8	10	12	15	8	10	12	15
	690 V∿	5	5	8	10	5	5	8	10
Ultimate breaking capacity (kA) in DC	125 V⎓ (1)	32	50	60	80	32	50	60	80
	250 V⎓ (1)	16	25	30	40	16	25	30	40
	400 V⎓ (2)	16	25	30	40	16	25	30	40
	500 V⎓ (2)	10	20	25	35	10	20	25	35
Standard breaking capacity Ics (% Icu)		100	100	100	100	100	100	100	100
Short-circuit making capacity Icm (kA)	415 V∿	32	52,5	75,6	105	32	52,5	75,6	105
Breaking capacity on 1 pole Isu (kA) For IT neutral earthing system	220/240 V∿	6,25	8,75	12,5	16,3	6,25	8,75	12,5	16,3
	380/415 V∿	4	6,25	9	12,5	4	6,25	9	12,5
	440 V∿	2,5	4,5	6,25	7,5	2,5	4,5	6,25	7,5
	480/500 V∿	2	2,5	3	3,75	2	2,5	3	3,75
	690 V∿	1,25	1,25	2	2,5	1,25	1,25	2	2,5

MCCBs		DPX³ 250 thermal magnetic				DPX³ 250 electronic release			
		25 kA	36 kA	50 kA	70 kA	25 kA	36 kA	50 kA	70 kA
Nominal current In (A)		100-160-200-250				40-100-160-250			
Rated insulation voltage (V)	50-60Hz	800 (with integrated e.l.c.bs: 500)				800 (with integrated e.l.c.bs: 600)			
Rated operational voltage (V)	50-60Hz	690 (with integrated e.l.c.bs: 500)				690 (with integrated e.l.c.bs: 500)			
	Continuous	500				500			
Rated impulse withstand current Uimp (kV)		8				8			
Category of use		A				A			
Ultimate breaking capacity (kA) in AC	220/240 V∿	40	60	80	100	40	60	80	100
	380/415 V∿	25	36	50	70	25	36	50	70
	440 V∿	20	30	40	60	20	30	40	60
	480/500 V∿	10	25	30	40	10	25	30	40
	690 V∿	8	16	18	20	8	16	-	20
Ultimate breaking capacity (kA) in DC	125 V⎓ (1)	50	72	80	90	50	72	80	90
	250 V⎓ (1)	25	36	40	45	25	36	40	45
	400 V⎓ (2)	30	45	50	55	30	45	50	55
	500 V⎓ (2)	25	36	40	45	25	36	40	45
Standard breaking capacity Ics (% Icu)		100	100	100	100	100	100	100	100
Breaking capacity on 1 pole Isu (kA) For IT neutral earthing system	220/240 V∿	10	15	20	25	15	15	20	25
	380/415 V∿	6,25	9	12,5	17,5	6,25	9	12,5	17,5
	440 V∿	5	7,5	10	15	5	7,5	10	15
	480/500 V∿	2,5	6,25	7,5	10	2,5	6,25	7,5	10
	690 V∿	2	4	4,5	5	-	-	-	-

■ Temperature derating

DPX³ 160

In (A)	Temperature (°C)											
	-25	-20	-10	-5	0	10	20	30	40	50	60	70
16	23	22	21	21	20	19	18	17	16	15	15	14
25	37	35	34	33	32	30	28	26	25	23	22	21
40	55	54	52	51	50	47	43	42	40	38	36	34
63	88	87	84	83	81	76	69	66	63	60	57	55
80	115	113	111	109	107	97	87	84	80	78	75	72
100	135	133	130	123	115	108	100	100	100	95	90	85
125	160	158	155	153	150	138	125	125	125	118	112	105
160	224	221	214	210	205	192	176	168	160	152	145	139

DPX³ 250

In (A)	Temperature (°C)											
	-25	-20	-10	-5	0	10	20	30	40	50	60	70
40	54	53	51	50	49	48	45	41	40	38	36	34
100	135	132	128	126	123	120	112	102	100	94	90	84
160	216	211	205	201	197	192	179	163	160	151	143	134
200	270	264	256	251	246	240	224	203	200	189	179	168
250	338	330	320	314	308	300	280	254	250	236	224	210

■ Derating at different altitudes

Altitude (m)		2000	3000	4000
Rated current (A)		1 x In	0,96 x In	0,93 x In
Rated voltage (V)	DPX³ no e.l.c.bs	690	690	550
	DPX³ with e.l.c.bs	500	500	400

(1) 2 poles in series
(2) 3 poles in series

DPX³ 160/250

■ DPX³ 160 thermal-magnetic Tripping curve

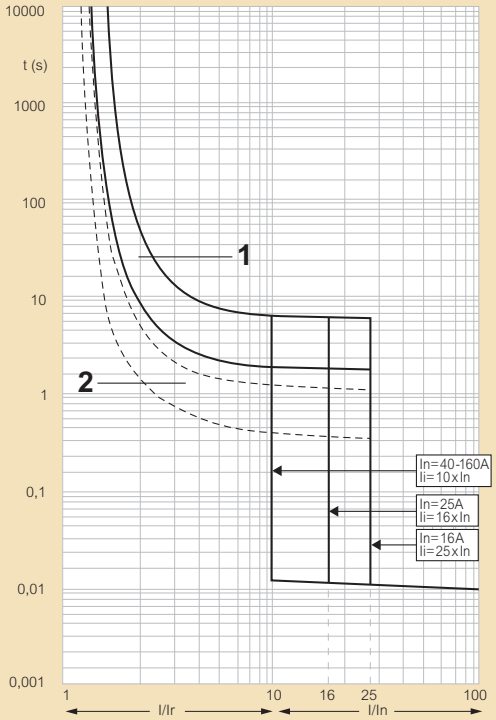

t: time
I: rated current
Ir: setting current
Curve n°1: charateristic with cold start
Curve n°2: charateristic with hot start

■ DPX³ 250 thermal-magnetic Tripping curves

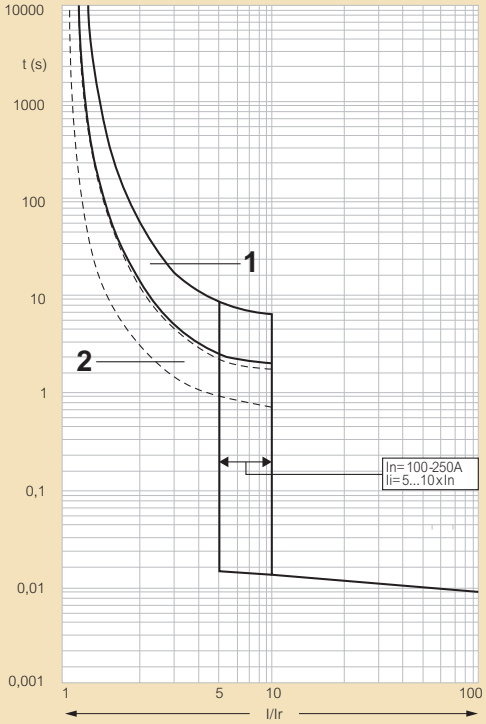

t: time
I: rated current
Ir: setting current
Curve n°1: charateristic with cold start
Curve n°2: charateristic with hot start

■ DPX³ 160 thermal-magnetic with integrated e.l.c.bs Tripping curves

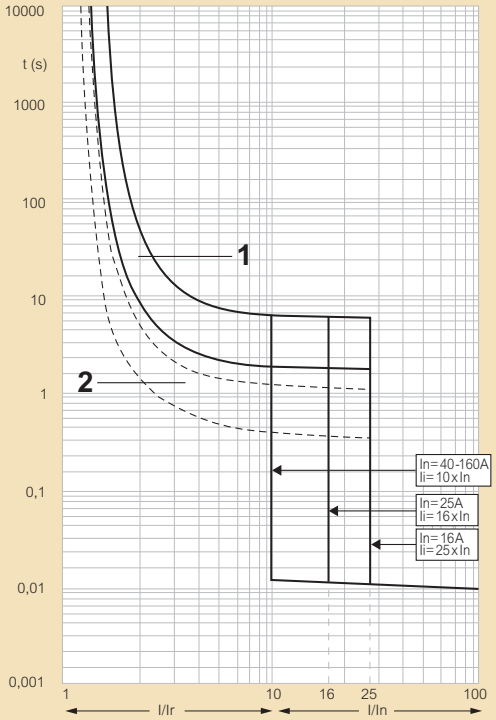

t: time
I: rated current
Ir: setting current
Curve n°1: charateristic with cold start
Curve n°2: charateristic with hot start

■ DPX³ 250 thermal-magnetic with integrated e.l.c.bs

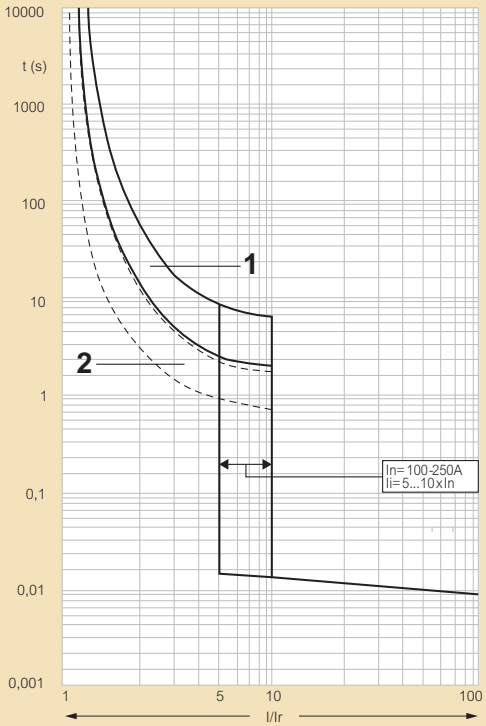

t: time
I: rated current
Ir: setting current

DPX³ 160/250 (continued)

DPX™
reading DPX characteristic curves and adjustment ranges

■ DPX³ 250 electronic release Tripping curves

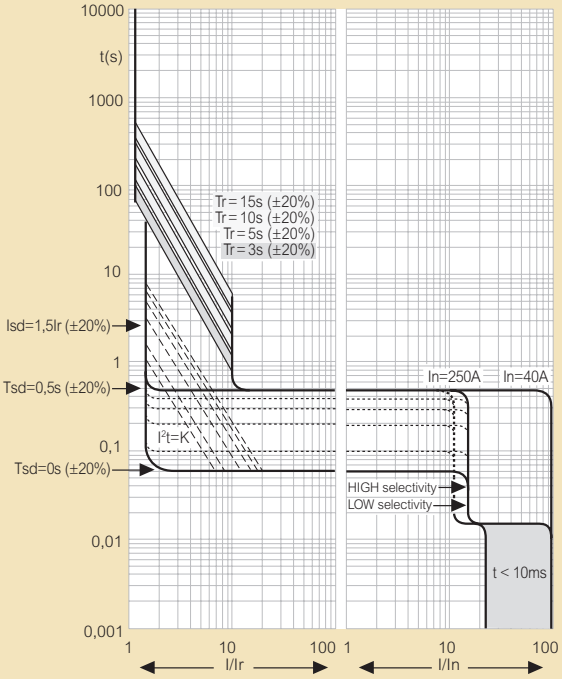

■ Adjustment for thermal-magnetic DPX³

Setting	DPX³ thermal magnetiac	DPX³ with integrated e.l.c.bs
Ir overload trip threshold (thermal)	0.4 to 1 In	0.4 to 1 In
Im short-circuit trip threshold (magnetic)	fixed: 10 In(1)	fixed: 10 In(1)
$I_{\Delta n}$ (A)	-	0.03 - 0.03 - 1 - 3
Δt (s)	-	0 - 0.3 - 1 - 3

(1) 400 A for DPX³ 160 In 16 A and 25 A

■ Adjustment for DPX³ electronic release

Setting	DPX³	DPX³ with integrated e.l.c.bs
Ir overload trip threshold (long delay)	0.4 to 1 In	
Tr long delay trip time	3 - 5 - 10 - 15s	
Im short-circuit trip threshold (short delay)	1.5 - 2 - 2.5 - 3 - 4 - 5 - 6 - 7 - 8 - 9 - 10 x Ir	
Tm short delay trip time	0.01 - 0.1 - 0.2 - 0.3 - 0.4 - 0.5s	
Ig	(0.2 - 0.3 - 0.4 - 0.5 - 0.6 - 0.7 - 0.8 - 1 - OFF) x In	
Tg	0.1 - 0.2 - 0.5 - 1s	

■ Tripping curve for a DPX thermal-magnetic trip

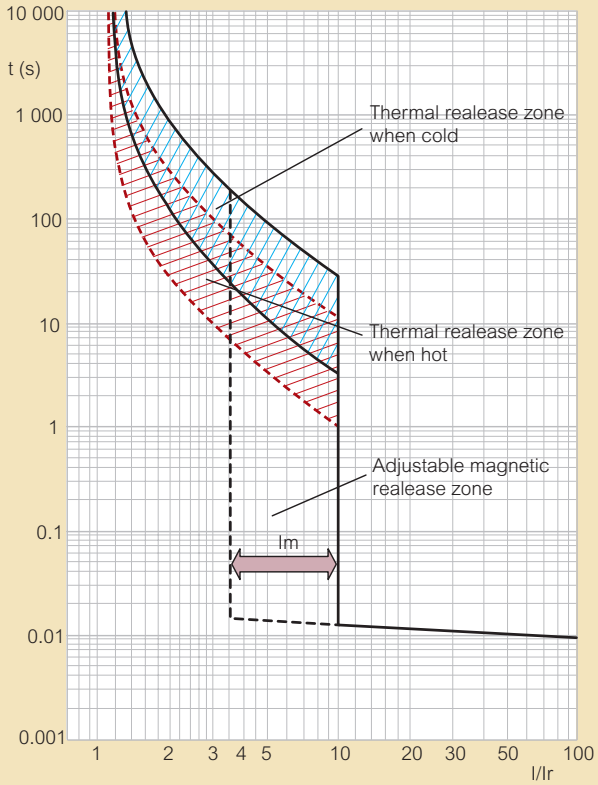

I: actual current
Ir: thermal protection against overloads (setting: Ir = x In)
Im: magnetic protection against short-circuits (setting: Im = x In or Im = x Ir)
As the abscissa of the curves represents the ratio I/Ir, modifying the setting of Ir will not change the graphical representation of the thermal trip. However, the magnetic setting can be read directly (between 3.5 and 10 in the example).

DPX™

reading DPX characteristic curves and adjustment ranges

■ Tripping curve for a DPX electronic release S1, adjustable Ir and Isd

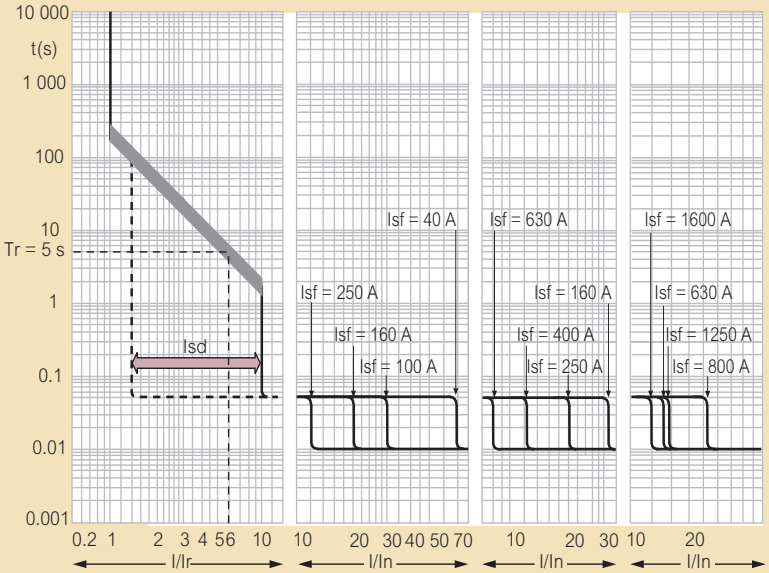

I: actual current
Ir: long delay protection against overloads (setting: Ir = x In)
Isd: long delay protection operation time (fixed value: 5 s at 6 Ir)
Isd: short delay protection against short-circuits (setting: Im = x Ir, between 1.5 and 10 Ir
in the example)
Tsd: short delay protection operation time (fixed value: 0.05 s)
If: fixed threshold instantaneous protection (4 to 20 kA depending on model)

■ Tripping curve for a DPX electronic release S2, adjustable Ir, Isd, Tr and Tsd

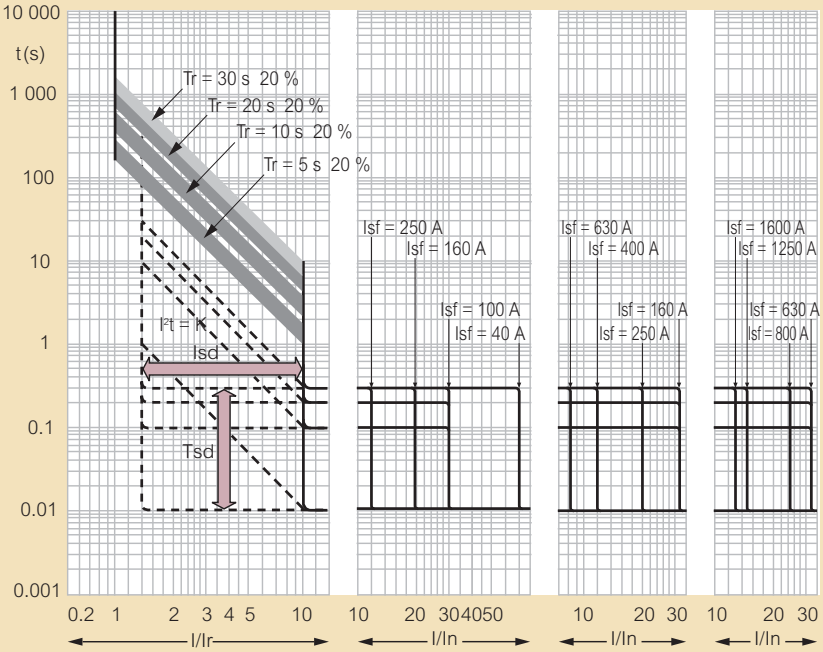

I: actual current
Ir: long delay protection against overloads (setting: Ir = x In)
Tr: long delay protection operation time (fixed value: 5 to 30 s)
Isd: short delay protection against short-circuits (setting: Im = x Ir, between 1.5 and 10 Ir in
the example)
Tsd: short delay protection operation time (setting: 0 to 0.3 s)
I^2t constant (adjustable via Tm)
If: fixed threshold instantaneous protection (4 to 20 kA depending on model)

■ Adjustment for thermal-magnetic DPX

Setting	DPX 250	DPX 630	DPX 1600
Ir overload trip threshold (thermal)	0.64 to 1 In	0.8 to 1 In	0.8 to 1 In
Im short-circuit trip threshold (magnetic)	3.5 to 10 In	5 to 10 In	5 to 10 In

■ Adjustment for DPX electronic release

Setting	DPX 250 / 630 / 1600 S1	DPX 250 / 630 / 1600 S2
Ir overload trip threshold (long delay)	0.4 - 0.5 - 0.6 - 0.7 - 0.8 - 0.9 - 0.95 - 1) x In	
Tr long delay trip time	fixed: 5 s (to 6 Ir)	5 - 10 - 20 - 30 s (to 6 Ir)
Im short-circuit trip threshold (short delay)	(1.5 - 2 - 3 - 4 - 5 - 6 - 8 - 10) x Ir(1)	
Tm Short delay trip time	fixed: 0.05 s	0 - 0.1 - 0.2 - 0.3 s

(1) 7.9 Ir for DPX 630 In 630 A

selectivity table thermal-magnetic release DPX³ or DPX / DPX³, DPX

■ Limits of selectivity (average values kA at 400 V∿)

Downstream MCCB	In (A)	Upstream MCCB																								
		DPX³160 (16. 25. 36. 50 kA) with or without e.l.c.bs								DPX³250 (25. 36. 50. 70 kA) with or without e.l.c.bs				DPX and DPX-H 250 (36 and 70 kA)					DPX and DPX-H 630 (36 and 70 kA)					DPX and DPX-H 1250 (36 and 70 kA)		
		16	25	40	63	80	100	125	160	100	160	200	250	40	63	100	160	250	250	320	400	500	630	800	1000	1250
DPX³ 160 (16. 25. 36. 50 kA) with or without e.l.c.bs	16	-	-	-	0.63	0.8	1	1.25	1.6	1	1.6	2	2.5	-	0.63	1	1.6	2.5	2.5	3.2	4	5	6.3	16	16	16
	25	-	-	-	0.63	0.8	1	1.25	1.6	1	1.6	2	2.5	-	0.63	1	1.6	2.5	2.5	3.2	4	5	6.3	16	16	16
	40	-	-	-	0.63	0.8	1	1.25	1.6	1	1.6	2	2.5	-	0.63	1	1.6	2.5	2.5	3.2	4	5	6.3	16	16	16
	63	-	-	-	-	0.8	1	1.25	1.6	1	1.6	2	2.5	-	-	1	1.6	2.5	2.5	3.2	4	5	6.3	16	16	16
	80	-	-	-	-	-	1	1.25	1.6	1	1.6	2	2.5	-	-	1	1.6	2.5	2.5	3.2	4	5	6.3	16	16	16
	100	-	-	-	-	-	-	1.25	1.6	-	1.6	2	2.5	-	-	-	1.6	2.5	2.5	3.2	4	5	6.3	16	16	16
	125	-	-	-	-	-	-	-	1.6	-	1.6	2	2.5	-	-	-	1.6	2.5	2.5	3.2	4	5	6.3	16	16	16
	160	-	-	-	-	-	-	-	-	-	-	2	2.5	-	-	-	-	2.5	2.5	3.2	4	5	6.3	16	16	16
DPX³ 250 thermal-magnetic (25, 36, 50, 70 kA) with or without e.l.c.bs	100	-	-	-	-	-	-	-	-	-	1.6	2	2.5	-	-	-	1.6	2.5	2.5	3.2	4	5	6.3	16	16	16
	160	-	-	-	-	-	-	-	-	-	-	2	2.5	-	-	-	-	2.5	2.5	3.2	4	5	6.3	16	16	16
	200	-	-	-	-	-	-	-	-	-	-	-	2.5	-	-	-	-	2.5	2.5	3.2	4	5	6.3	16	16	16
	250	-	-	-	-	-	-	-	-	-	-	-	-	-	-	-	-	-	-	3.2	4	5	6.3	16	16	16
DPX³ 250 electronic release(1) (25, 36, 50, 70 kA) with or without e.l.c.bs	40	-	-	-	-	-	-	-	-	-	-	-	-	-	0.63	1	1.6	2.5	2	2.5	3.2	4	5	-	-	-
	100	-	-	-	-	-	-	-	-	-	-	-	-	-	-	-	1.6	2.5	2	2.5	3.2	4	5	-	-	-
	160	-	-	-	-	-	-	-	-	-	-	-	-	-	-	-	-	2.5	2	2.5	3.2	4	5	-	-	-
	200	-	-	-	-	-	-	-	-	-	-	-	-	-	-	-	-	2.5	2	2.5	3.2	4	5	-	-	-
	250	-	-	-	-	-	-	-	-	-	-	-	-	-	-	-	-	-	-	2.5	3.2	4	5	-	-	-
DPX³ 250 electronic release(2) (25, 36, 50, 70 kA) with or without e.l.c.bs	40	-	-	-	-	-	-	-	-	1	1.6	2	2.5	-	0.63	1	1.6	2.5	2.5	3.2	4	5	6.3	16	16	16
	100	-	-	-	-	-	-	-	-	-	1.6	2	2.5	-	-	-	1.6	2.5	2.5	3.2	4	5	6.3	16	16	16
	160	-	-	-	-	-	-	-	-	-	-	2	2.5	-	-	-	-	2.5	2.5	3.2	4	5	6.3	16	16	16
	200	-	-	-	-	-	-	-	-	-	-	-	2.5	-	-	-	-	2.5	2.5	3.2	4	5	6.3	16	16	16
	250	-	-	-	-	-	-	-	-	-	-	-	-	-	-	-	-	-	-	3.2	4	5	6.3	16	16	16
DPX and DPX-H 250 thermal magnetic (36, 70 kA)	40	-	-	-	-	-	-	-	-	1	1.6	2	2.5	-	0.63	1	1.6	2.5	2.5	3.2	4	5	6.3	16	16	16
	63	-	-	-	-	-	-	-	-	1	1.6	2	2.5	-	-	1	1.6	2.5	2.5	3.2	4	5	6.3	16	16	16
	100	-	-	-	-	-	-	-	-	-	1.6	2	2.5	-	-	-	1.6	2.5	2.5	3.2	4	5	6.3	16	16	16
	160	-	-	-	-	-	-	-	-	-	-	2	2.5	-	-	-	-	2.5	2.5	3.2	4	5	6.3	16	16	16
	250	-	-	-	-	-	-	-	-	-	-	-	-	-	-	-	-	-	-	3.2	4	5	6.3	16	16	16
DPX 250 electronic release(1) S1 and S2 (36, 70 kA)	40	-	-	-	-	-	-	-	-	-	-	-	-	-	-	-	-	-	2	2.5	3.2	4	5	-	-	-
	100	-	-	-	-	-	-	-	-	-	-	-	-	-	-	-	-	-	2	2.5	3.2	4	5	-	-	-
	160	-	-	-	-	-	-	-	-	-	-	-	-	-	-	-	-	-	2	2.5	3.2	4	5	-	-	-
	250	-	-	-	-	-	-	-	-	-	-	-	-	-	-	-	-	-	-	2.5	3.2	4	5	-	-	-
DPX 250 electronic release(2) S1 and S2 (36, 70 kA)	40	-	-	-	-	-	-	-	-	1	1.6	2	2.5	-	0.63	1	1.6	2.5	2.5	3.2	4	5	6.3	16	16	16
	100	-	-	-	-	-	-	-	-	-	1.6	2	2.5	-	-	-	1.6	2.5	2.5	3.2	4	5	6.3	16	16	16
	160	-	-	-	-	-	-	-	-	-	-	2	2.5	-	-	-	-	2.5	2.5	3.2	4	5	6.3	16	16	16
	250	-	-	-	-	-	-	-	-	-	-	-	-	-	-	-	-	-	-	3.2	4	5	6.3	16	16	16
DPX and DPX-H 630 thermal magnetic (36, 70 kA)	250	-	-	-	-	-	-	-	-	-	-	-	-	-	-	-	-	-	-	3.2	4	5	6.3	16	16	16
	320	-	-	-	-	-	-	-	-	-	-	-	-	-	-	-	-	-	-	-	4	5	6.3	16	16	16
	400	-	-	-	-	-	-	-	-	-	-	-	-	-	-	-	-	-	-	-	-	5	6.3	16	16	16
	500	-	-	-	-	-	-	-	-	-	-	-	-	-	-	-	-	-	-	-	-	-	6.3	16	16	16
	630	-	-	-	-	-	-	-	-	-	-	-	-	-	-	-	-	-	-	-	-	-	-	16	16	16
DPX and DPX-H 630 electronic release(1) S1 and S2 (36, 70 kA)	250	-	-	-	-	-	-	-	-	-	-	-	-	-	-	-	-	-	-	-	-	-	-	-	-	-
	400	-	-	-	-	-	-	-	-	-	-	-	-	-	-	-	-	-	-	-	-	-	-	-	-	-
	630	-	-	-	-	-	-	-	-	-	-	-	-	-	-	-	-	-	-	-	-	-	-	-	-	-
DPX and DPX-H 630 electronic release(2) S1 and S2 (36, 70 kA)	250	-	-	-	-	-	-	-	-	-	-	-	-	-	-	-	-	-	-	3.2	4	5	6.3	8	8	8
	400	-	-	-	-	-	-	-	-	-	-	-	-	-	-	-	-	-	-	-	-	5	6.3	8	8	8
	630	-	-	-	-	-	-	-	-	-	-	-	-	-	-	-	-	-	-	-	-	-	-	8	8	8
DPX and DPX-H 1250 thermal magnetic (50, 70 kA)	800	-	-	-	-	-	-	-	-	-	-	-	-	-	-	-	-	-	-	-	-	-	-	-	8	8
	1000	-	-	-	-	-	-	-	-	-	-	-	-	-	-	-	-	-	-	-	-	-	-	-	-	8
	1250	-	-	-	-	-	-	-	-	-	-	-	-	-	-	-	-	-	-	-	-	-	-	-	-	-
DPX and DPX-H 1600 electronic release(1) S1 and S2 (50, 70 kA)	800	-	-	-	-	-	-	-	-	-	-	-	-	-	-	-	-	-	-	-	-	-	-	-	-	-
	1250	-	-	-	-	-	-	-	-	-	-	-	-	-	-	-	-	-	-	-	-	-	-	-	-	-
	1600	-	-	-	-	-	-	-	-	-	-	-	-	-	-	-	-	-	-	-	-	-	-	-	-	-
DPX and DPX-H 1600 electronic release(2) S1 and S2 (50, 70 kA)	800	-	-	-	-	-	-	-	-	-	-	-	-	-	-	-	-	-	-	-	-	-	-	-	8	8
	1250	-	-	-	-	-	-	-	-	-	-	-	-	-	-	-	-	-	-	-	-	-	-	-	-	-
	1600	-	-	-	-	-	-	-	-	-	-	-	-	-	-	-	-	-	-	-	-	-	-	-	-	-

T = total selectivity. up to downstream circuit breaker breaking capacity. according to IEC 60947-2
(1) Elecrtonic release. selector switch on "HIGH"
(2) Electronic release. selector switch on "LOW"

selectivity table electronic release DPX³ or DPX / DPX³, DPX

■ Limits of selectivity (average values kA at 400 V∿)

Downstream MCCB	Icu (kA)	In (A)	Upstream MCCB electronic release, selector switch on "HIGH"													
			DPX³ 250 electronic release (25, 36, 50, 70 kA) with or without e.l.c.bs				DPX and DPX-H 250 electronic release S1, S2 (36 and 70 kA)				DPX and DPX-H 630 electronic release S1, S2 (36 and 70 kA)			DPX and DPX-H 1600 electronic release S1, S2 (50 and 70 kA)		
			40	100	160	250	40	100	160	250	250	400	630	800	1250	1600
DPX³ 160 with or without e.l.c.bs	16 kA	16, 25	T	T	T	T	-	T	T	T	T	T	T	T	T	T
		40, 63, 80	-	T	T	T	-	T	T	T	T	T	T	T	T	T
		100	-	-	T	T	-	-	T	T	T	T	T	T	T	T
		125	-	-	-	T	-	-	T	T	T	T	T	T	T	T
		160	-	-	-	T	-	-	-	T	T	T	T	T	T	T
	25 kA	16, 25	16	16	16	16	-	T	T	T	T	T	T	T	T	T
		40, 63, 80	-	16	16	16	-	T	T	T	T	T	T	T	T	T
		100	-	-	16	16	-	-	T	T	T	T	T	T	T	T
		125	-	-	-	16	-	-	T	T	T	T	T	T	T	T
		160	-	-	-	16	-	-	-	T	T	T	T	T	T	T
	36 kA	16, 25	16	16	16	16	-	T	T	T	T	T	T	T	T	T
		40, 63, 80	-	16	16	16	-	T	T	T	T	T	T	T	T	T
		100	-	-	16	16	-	-	T	T	T	T	T	T	T	T
		125	-	-	-	16	-	-	T	T	T	T	T	T	T	T
		160	-	-	-	16	-	-	-	T	T	T	T	T	T	T
	50 kA	16, 25	25	25	25	25	-	25	25	25	36	36	36	36	36	36
		40, 63, 80	-	25	25	25	-	25	25	25	36	36	36	36	36	36
		100	-	-	25	25	-	-	25	25	36	36	36	36	36	36
		125	-	-	-	25	-	-	25	25	36	36	36	36	36	36
		160	-	-	-	25	-	-	-	25	36	36	36	36	36	36
DPX³ 250 thermal-magnetic with or without e.l.c.bs	25 kA	100	-	-	16	16	-	-	T	T	T	T	T	T	T	T
		160	-	-	-	16	-	-	-	T	T	T	T	T	T	T
		200	-	-	-	16	-	-	-	T	T	T	T	T	T	T
		250	-	-	-	-	-	-	-	-	-	T	T	T	T	T
	36 kA	100	-	-	25	25	-	-	25	25	T	T	T	T	T	T
		160	-	-	-	25	-	-	-	25	T	T	T	T	T	T
		200	-	-	-	25	-	-	-	25	T	T	T	T	T	T
		250	-	-	-	-	-	-	-	-	-	T	T	T	T	T
	50 kA	100	-	-	25	25	-	-	25	25	T	T	T	T	T	T
		160	-	-	-	25	-	-	-	25	T	T	T	T	T	T
		200	-	-	-	25	-	-	-	25	T	T	T	T	T	T
		250	-	-	-	-	-	-	-	-	-	T	T	T	T	T
	70 kA	100	-	-	36	36	-	-	36	36	36	36	36	36	36	36
		160	-	-	-	36	-	-	-	36	36	36	36	36	36	36
		200	-	-	-	36	-	-	-	36	36	36	36	36	36	36
		250	-	-	-	-	-	-	-	-	-	36	36	36	36	36
DPX³ 250 electronic release(1) with or without e.l.c.bs	25 kA	40	-	1	1.6	2.5	-	1	1.6	2.5	2.5	4	6.3	8	12.5	16
		100	-	-	1.6	2.5	-	-	1.6	2.5	2.5	4	6.3	8	12.5	16
		160	-	-	-	2.5	-	-	-	2.5	2.5	4	6.3	8	12.5	16
		250	-	-	-	-	-	-	-	-	-	4	6.3	8	12.5	16
	36 kA	40	-	1	1.6	2.5	-	1	1.6	2.5	2.5	4	6.3	8	12.5	16
		100	-	-	1.6	2.5	-	-	1.6	2.5	2.5	4	6.3	8	12.5	16
		160	-	-	-	2.5	-	-	-	2.5	2.5	4	6.3	8	12.5	16
		250	-	-	-	-	-	-	-	-	-	4	6.3	8	12.5	16
	50 kA	40	-	1	1.6	2.5	-	1	1.6	2.5	2.5	4	6.3	8	12.5	16
		100	-	-	1.6	2.5	-	-	1.6	2.5	2.5	4	6.3	8	12.5	16
		160	-	-	-	2.5	-	-	-	2.5	2.5	4	6.3	8	12.5	16
		250	-	-	-	-	-	-	-	-	-	4	6.3	8	12.5	16
	70 kA	40	-	1	1.6	2.5	-	1	1.6	2.5	2.5	4	6.3	8	12.5	16
		100	-	-	1.6	2.5	-	-	1.6	2.5	2.5	4	6.3	8	12.5	16
		160	-	-	-	2.5	-	-	-	2.5	2.5	4	6.3	8	12.5	16
		250	-	-	-	-	-	-	-	-	-	4	6.3	8	12.5	16
DPX³ 250 electronic release(2) with or without e.l.c.bs	25 kA	40	-	T	T	T	-	25	25	25	T	T	T	T	T	T
		100	-	-	T	T	-	-	25	25	T	T	T	T	T	T
		160	-	-	-	T	-	-	-	25	T	T	T	T	T	T
		250	-	-	-	-	-	-	-	-	-	T	T	T	T	T
	36 kA	40	-	36	36	36	-	36	36	36	36	36	36	T	T	T
		100	-	-	36	36	-	-	36	36	36	36	36	T	T	T
		160	-	-	-	36	-	-	-	36	36	36	36	T	T	T
		250	-	-	-	-	-	-	-	-	-	36	36	T	T	T
	50 kA	40	-	36	36	36	-	36	36	36	36	36	36	36	36	36
		100	-	-	36	36	-	-	36	36	36	36	36	36	36	36
		160	-	-	-	36	-	-	-	36	36	36	36	36	36	36
		250	-	-	-	-	-	-	-	-	-	36	36	36	36	36
	70 kA	40	-	36	36	36	-	36	36	36	36	36	36	36	36	36
		100	-	-	36	36	-	-	36	36	36	36	36	36	36	36
		160	-	-	-	36	-	-	-	36	36	36	36	36	36	36
		250	-	-	-	-	-	-	-	-	-	36	36	36	36	36
DPX 250 thermal magnetic	36 kA	40	-	T	T	T	-	25	25	25	T	T	T	T	T	T
		63	-	T	T	T	-	25	25	25	T	T	T	T	T	T
		100	-	-	T	T	-	-	25	25	T	T	T	T	T	T
		160	-	-	-	T	-	-	-	25	T	T	T	T	T	T
		250	-	-	-	-	-	-	-	-	-	T	T	T	T	T
	70 kA	40	-	36	36	36	-	36	36	36	36	36	36	36	36	36
		63	-	36	36	36	-	36	36	36	36	36	36	36	36	36
		100	-	-	36	36	-	-	36	36	36	36	36	36	36	36
		160	-	-	-	36	-	-	-	36	36	36	36	36	36	36
		250	-	-	-	-	-	-	-	-	-	36	36	36	36	36
DPX 250 electronic release(1) S1, S2	36 and 70 kA	40	-	1	1.6	2.5	-	1	1.6	2.5	2.5	4	6.3	8	12.5	16
		100	-	-	1.6	2.5	-	-	1.6	2.5	2.5	4	6.3	8	12.5	16
		160	-	-	-	2.5	-	-	-	2.5	2.5	4	6.3	8	12.5	16
		250	-	-	-	-	-	-	-	-	-	4	6.3	8	12.5	16
DPX 250 electronic release(2) S1, S2	36 and 70 kA	40	-	36	36	36	36	36	36	36	36	36	36	36	36	36
		100	-	-	36	36	-	-	36	36	36	36	36	36	36	36
		160	-	-	-	36	-	-	-	36	-	36	36	36	36	36
		250	-	-	-	-	-	-	-	-	-	36	36	36	36	36
DPX and DPX-H 630 thermal magnetic	36 kA	250	-	-	-	-	-	-	-	-	-	25	25	T	T	T
		320	-	-	-	-	-	-	-	-	-	-	25	T	T	T
		400	-	-	-	-	-	-	-	-	-	-	25	T	T	T
		500	-	-	-	-	-	-	-	-	-	-	25	T	T	T
		630	-	-	-	-	-	-	-	-	-	-	-	T	T	T
DPX and DPX-H 630 thermal magnetic	70 kA	250	-	-	-	-	-	-	-	-	-	25	25	36	36	36
		320	-	-	-	-	-	-	-	-	-	-	25	36	36	36
		400	-	-	-	-	-	-	-	-	-	-	25	36	36	36
		500	-	-	-	-	-	-	-	-	-	-	25	36	36	36
		630	-	-	-	-	-	-	-	-	-	-	-	36	36	36
DPX and DPX-H 630 electronic release(1) S1, S2	36 and 70 kA	250	-	-	-	-	-	-	-	-	-	4	6.3	8	12.5	16
		400	-	-	-	-	-	-	-	-	-	-	6.3	8	12.5	16
		630	-	-	-	-	-	-	-	-	-	-	-	8	12.5	16
DPX and DPX-H 630 electronic release(2) S1, S2	36 kA	250	-	-	-	-	-	-	-	-	-	25	25	T	T	T
		400	-	-	-	-	-	-	-	-	-	-	25	T	T	T
		630	-	-	-	-	-	-	-	-	-	-	-	T	T	T
DPX and DPX-H 630 electronic release(2) S1, S2	70 kA	250	-	-	-	-	-	-	-	-	-	25	25	36	36	36
		400	-	-	-	-	-	-	-	-	-	-	25	36	36	36
		630	-	-	-	-	-	-	-	-	-	-	-	36	36	36
DPX 1250 thermal magnetic	50 and 70 kA	800	-	-	-	-	-	-	-	-	-	-	-	-	T	T
		1000	-	-	-	-	-	-	-	-	-	-	-	-	T	T
		1250	-	-	-	-	-	-	-	-	-	-	-	-	-	T
DPX and DPX-H 1600 electronic release(1) S1, S2	50 and 70 kA	630	-	-	-	-	-	-	-	-	-	-	-	8	12.5	16
		800	-	-	-	-	-	-	-	-	-	-	-	-	12.5	16
		1250	-	-	-	-	-	-	-	-	-	-	-	-	-	16
		1600	-	-	-	-	-	-	-	-	-	-	-	-	-	-
DPX and DPX-H 1600 electronic release(2) S1, S2	50 and 70 kA	630	-	-	-	-	-	-	-	-	-	-	-	36	36	36
		800	-	-	-	-	-	-	-	-	-	-	-	-	36	36
		1250	-	-	-	-	-	-	-	-	-	-	-	-	-	36
		1600	-	-	-	-	-	-	-	-	-	-	-	-	-	-

T = total selectivity, up to downstream circuit breaker breaking capacity, according to IEC 60947-2
(1) Elecrtonic release, selector switch on "HIGH" - (2) Electronic release, selector switch on "LOW"

selectivity table electronic release DPX³ or DPX / DPX³, DPX (continued)

■ Limits of selectivity (average values kA at 400 V∿)

Downstream MCCB	Icu (kA)	In (A)	Upstream MCCB electronic release, selector switch on "LOW"													
			DPX³ 250 electronic release (25, 36, 50, 70 kA) with or without e.l.c.bs				DPX and DPX-H 250 electronic release S1, S2 (36 and 70 kA)				DPX and DPX-H 630 electronic release S1, S2 (36 and 70 kA)			DPX and DPX-H 1600 electronic release S1, S2 (50 and 70 kA)		
			40	100	160	250	40	100	160	250	250	400	630	800	1250	1600
DPX³ 160 with or without e.l.c.bs	16 kA	16, 25	-	1	1.6	2.5	3.5	3.5	3.5	3.5	6	6	6.3	T	T	T
		40, 63, 80	-	1	1.6	2.5	-	3.5	3.5	3.5	6	6	6.3	T	T	T
		100	-	-	1.6	2.5	-	-	3.5	3.5	6	6	6.3	T	T	T
		125	-	-	1.6	2.5	-	-	3.5	3.5	6	6	6.3	T	T	T
		160	-	-	-	2.5	-	-	-	3.5	6	6	6.3	T	T	T
	25 kA	16, 25	-	1	1.6	2.5	3.5	3.5	3.5	3.5	6	6	6.3	T	T	T
		40, 63, 80	-	1	1.6	2.5	-	3.5	3.5	3.5	6	6	6.3	T	T	T
		100	-	-	1.6	2.5	-	-	3.5	3.5	6	6	6.3	T	T	T
		125	-	-	1.6	2.5	-	-	3.5	3.5	6	6	6.3	T	T	T
		160	-	-	-	2.5	-	-	-	3.5	6	6	6.3	T	T	T
	36 kA	16, 25	-	1	1.6	2.5	3.5	3.5	3.5	3.5	6	6	6.3	T	T	T
		40, 63, 80	-	1	1.6	2.5	-	3.5	3.5	3.5	6	6	6.3	T	T	T
		100	-	-	1.6	2.5	-	-	3.5	3.5	6	6	6.3	T	T	T
		125	-	-	1.6	2.5	-	-	3.5	3.5	6	6	6.3	T	T	T
		160	-	-	-	2.5	-	-	-	3.5	6	6	6.3	T	T	T
	50 kA	16, 25	-	1	1.6	2.5	3.5	3.5	3.5	3.5	6	6	6.3	T	T	T
		40, 63, 80	-	1	1.6	2.5	-	3.5	3.5	3.5	6	6	6.3	T	T	T
		100	-	-	1.6	2.5	-	-	3.5	3.5	6	6	6.3	T	T	T
		125	-	-	1.6	2.5	-	-	3.5	3.5	6	6	6.3	T	T	T
		160	-	-	-	2.5	-	-	-	3.5	6	6	6.3	T	T	T
DPX³ 250 thermal-magnetic with or without e.l.c.bs	25 kA	100	-	-	1.6	2.5	-	-	3.5	3.5	6	6	6.3	T	T	T
		160	-	-	-	2.5	-	-	-	3.5	6	6	6.3	T	T	T
		200	-	-	-	2.5	-	-	-	3.5	6	6	6.3	T	T	T
		250	-	-	-	-	-	-	-	-	-	6	6.3	T	T	T
	36 kA	100	-	-	1.6	2.5	-	-	3.5	3.5	6	6	6.3	T	T	T
		160	-	-	-	2.5	-	-	-	3.5	6	6	6.3	T	T	T
		200	-	-	-	2.5	-	-	-	3.5	6	6	6.3	T	T	T
		250	-	-	-	-	-	-	-	-	-	6	6.3	T	T	T
	50 kA	100	-	-	1.6	2.5	-	-	3.5	3.5	6	6	6.3	T	T	T
		160	-	-	-	2.5	-	-	-	3.5	6	6	6.3	T	T	T
		200	-	-	-	2.5	-	-	-	3.5	6	6	6.3	T	T	T
		250	-	-	-	-	-	-	-	-	-	6	6.3	T	T	T
	70 kA	100	-	-	1.6	2.5	-	-	3.5	3.5	6	6	6.3	T	T	T
		160	-	-	-	2.5	-	-	-	3.5	6	6	6.3	T	T	T
		200	-	-	-	2.5	-	-	-	3.5	6	6	6.3	T	T	T
		250	-	-	-	-	-	-	-	-	-	6	6.3	T	T	T
DPX³ 250 electronic release(1) with or without e.l.c.bs	25 kA	40	-	1	1.6	2.5	-	1	1.6	2.5	8	8	8	T	T	T
		100	-	-	1.6	2.5	-	-	1.6	2.5	6	6	6.3	T	T	T
		160	-	-	-	2.5	-	-	-	2.5	6	6	6.3	T	T	T
		250	-	-	-	-	-	-	-	-	-	6	6.3	T	T	T
	36 kA	40	-	1	1.6	2.5	-	1	1.6	2.5	8	8	8	T	T	T
		100	-	-	1.6	2.5	-	-	1.6	2.5	6	6	6.3	T	T	T
		160	-	-	-	2.5	-	-	-	2.5	6	6	6.3	T	T	T
		250	-	-	-	-	-	-	-	-	-	6	6.3	T	T	T
	50 kA	40	-	1	1.6	2.5	-	1	1.6	2.5	8	8	8	T	T	T
		100	-	-	1.6	2.5	-	-	1.6	2.5	6	6	6.3	T	T	T
		160	-	-	-	2.5	-	-	-	2.5	6	6	6.3	T	T	T
		250	-	-	-	-	-	-	-	-	-	6	6.3	T	T	T
	70 kA	40	-	1	1.6	2.5	-	1	1.6	2.5	8	8	8	T	T	T
		100	-	-	1.6	2.5	-	-	1.6	2.5	6	6	6.3	T	T	T
		160	-	-	-	2.5	-	-	-	2.5	6	6	6.3	T	T	T
		250	-	-	-	-	-	-	-	-	-	6	6.3	T	T	T
DPX 250 thermal magnetic	36 kA	40	-	-	1.6	2.5	-	3.5	3.5	3.5	8	8	8	T	T	T
		63	-	-	1.6	2.5	-	3.5	3.5	3.5	8	8	8	T	T	T
		100	-	-	1.6	2.5	-	-	3.5	3.5	8	8	8	T	T	T
		160	-	-	-	2.5	-	-	-	3.5	6	6	6	T	T	T
		250	-	-	-	-	-	-	-	-	-	6	6	T	T	T
	70 kA	40	-	-	1.6	2.5	-	3.5	3.5	3.5	8	8	8	70	70	70
		63	-	-	1.6	2.5	-	3.5	3.5	3.5	8	8	8	70	70	70
		100	-	-	1.6	2.5	-	-	3.5	3.5	8	8	8	70	70	70
		160	-	-	-	2.5	-	-	-	3.5	6	6	6	70	70	70
		250	-	-	-	-	-	-	-	-	-	6	6	70	70	70
DPX 250 electronic release(1) S1, S2	36 kA	40	-	1	1.6	2.5	-	1	1.6	2.5	8	8	8	T	T	T
		100	-	-	1.6	2.5	-	-	1.6	2.5	6	6	6	T	T	T
		160	-	-	-	2.5	-	-	-	2.5	6	6	6	T	T	T
		250	-	-	-	-	-	-	-	-	-	6	6	T	T	T
	70 kA	40	-	1	1.6	2.5	-	1	1.6	2.5	8	8	8	70	70	70
		100	-	-	1.6	2.5	-	-	1.6	2.5	6	6	6	70	70	70
		160	-	-	-	2.5	-	-	-	2.5	6	6	6	70	70	70
		250	-	-	-	-	-	-	-	-	-	6	6	70	70	70
DPX and DPX-H 630 thermal magnetic	36 kA	250	-	-	-	-	-	-	-	-	-	6	6.3	20	20	T
		320	-	-	-	-	-	-	-	-	-	6	6.3	20	20	T
		400	-	-	-	-	-	-	-	-	-	-	6.3	20	20	T
		500	-	-	-	-	-	-	-	-	-	-	6.3	20	20	T
		630	-	-	-	-	-	-	-	-	-	-	-	20	20	T
	70 kA	250	-	-	-	-	-	-	-	-	-	6	6.3	20	20	36
		320	-	-	-	-	-	-	-	-	-	6	6.3	20	20	36
		400	-	-	-	-	-	-	-	-	-	-	6.3	20	20	36
		500	-	-	-	-	-	-	-	-	-	-	6.3	20	20	36
		630	-	-	-	-	-	-	-	-	-	-	-	20	20	36
DPX and DPX-H 630 electronic release(1) S1, S2	36 kA	250	-	-	-	-	-	-	-	-	-	5	5	20	20	T
		400	-	-	-	-	-	-	-	-	-	-	5	20	20	T
		630	-	-	-	-	-	-	-	-	-	-	-	20	20	T
	70 kA	250	-	-	-	-	-	-	-	-	-	5	5	20	20	36
		400	-	-	-	-	-	-	-	-	-	-	5	20	20	36
		630	-	-	-	-	-	-	-	-	-	-	-	20	20	36
DPX 1250 thermal magnetic	36 and 70 kA	630	-	-	-	-	-	-	-	-	-	-	-	15	20	20
		800	-	-	-	-	-	-	-	-	-	-	-	-	20	20
		1000	-	-	-	-	-	-	-	-	-	-	-	-	20	20
		1250	-	-	-	-	-	-	-	-	-	-	-	-	-	20
DPX and DPX-H 1600 electronic release(1) S1, S2	36 and 70 kA	630	-	-	-	-	-	-	-	-	-	-	-	15	15	20
		800	-	-	-	-	-	-	-	-	-	-	-	-	15	20
		1250	-	-	-	-	-	-	-	-	-	-	-	-	-	20
		1600	-	-	-	-	-	-	-	-	-	-	-	-	-	-

T = total selectivity, up to downstream circuit breaker breaking capacity, according to IEC 60947-2
(1) Electronic release, selector switch on "LOW"

selectivity table DMX³ / DPX³, DPX

■ Limits of selectivity (average values kA at 400 V∿)

Downstream MCCB	In	Upstream ACB																							
		DMX³ - N 2500 (50 kA)						DMX³ - H 2500 (65 kA)						DMX³ - L 2500 (100 kA)						DMX³-N 4000 (50 kA)		DMX³-H 4000 (65 kA)		DMX³-L 4000 (100 kA)	
		800	1000	1250	1600	2000	2500	800	1000	1250	1600	2000	2500	800	1000	1250	1600	2000	2500	3200	4000	3200	4000	3200	4000
DPX³ 160 (16, 25, 36, 50 kA) with or without e.l.c.bs	16	T	T	T	T	T	T	T	T	T	T	T	T	T	T	T	T	T	T	T	T	T	T	T	T
	25	T	T	T	T	T	T	T	T	T	T	T	T	T	T	T	T	T	T	T	T	T	T	T	T
	40	T	T	T	T	T	T	T	T	T	T	T	T	T	T	T	T	T	T	T	T	T	T	T	T
	63	T	T	T	T	T	T	T	T	T	T	T	T	T	T	T	T	T	T	T	T	T	T	T	T
	80	T	T	T	T	T	T	T	T	T	T	T	T	T	T	T	T	T	T	T	T	T	T	T	T
	100	T	T	T	T	T	T	T	T	T	T	T	T	T	T	T	T	T	T	T	T	T	T	T	T
	125	T	T	T	T	T	T	T	T	T	T	T	T	T	T	T	T	T	T	T	T	T	T	T	T
	160	T	T	T	T	T	88	T	T	T	T	T	T	T	T	T	T	T	T	T	T	T	T	T	T
DPX³ 250 thermal-magnetic (25, 36, 50 kA) with or without e.l.c.bs	100	T	T	T	T	T	T	T	T	T	T	T	T	T	T	T	T	T	T	T	T	T	T	T	T
	160	T	T	T	T	T	T	T	T	T	T	T	T	T	T	T	T	T	T	T	T	T	T	T	T
	200	T	T	T	T	T	T	T	T	T	T	T	T	T	T	T	T	T	T	T	T	T	T	T	T
	250	T	T	T	T	T	T	T	T	T	T	T	T	T	T	T	T	T	T	T	T	T	T	T	T
DPX³ 250 thermal-magnetic (70 kA) with or without e.l.c.bs	100	-	-	-	-	-	-	-	-	-	-	-	-	T	T	T	T	T	T	T	T	T	T	T	T
	160	-	-	-	-	-	-	-	-	-	-	-	-	T	T	T	T	T	T	T	T	T	T	T	T
	200	-	-	-	-	-	-	-	-	-	-	-	-	T	T	T	T	T	T	T	T	T	T	T	T
	250	-	-	-	-	-	-	-	-	-	-	-	-	T	T	T	T	T	T	T	T	T	T	T	T
DPX³ 250 electronic release(1) (25, 36, 50 kA) with or without e.l.c.bs	40	T	T	T	T	T	T	T	T	T	T	T	T	T	T	T	T	T	T	T	T	T	T	T	T
	100	T	T	T	T	T	T	T	T	T	T	T	T	T	T	T	T	T	T	T	T	T	T	T	T
	160	T	T	T	T	T	T	T	T	T	T	T	T	T	T	T	T	T	T	T	T	T	T	T	T
	200	T	T	T	T	T	T	T	T	T	T	T	T	T	T	T	T	T	T	T	T	T	T	T	T
	250	T	T	T	T	T	T	T	T	T	T	T	T	T	T	T	T	T	T	T	T	T	T	T	T
DPX³ 250 electronic release(1) (70 kA) with or without e.l.c.bs	40	-	-	-	-	-	-	-	-	-	-	-	-	T	T	T	T	T	T	T	T	T	T	T	T
	100	-	-	-	-	-	-	-	-	-	-	-	-	T	T	T	T	T	T	T	T	T	T	T	T
	160	-	-	-	-	-	-	-	-	-	-	-	-	T	T	T	T	T	T	T	T	T	T	T	T
	200	-	-	-	-	-	-	-	-	-	-	-	-	T	T	T	T	T	T	T	T	T	T	T	T
	250	-	-	-	-	-	-	-	-	-	-	-	-	T	T	T	T	T	T	T	T	T	T	T	T
DPX³ 250 electronic release(2) (25, 36, 50 kA) with or without e.l.c.bs	40	T	T	T	T	T	T	T	T	T	T	T	T	T	T	T	T	T	T	T	T	T	T	T	T
	100	T	T	T	T	T	T	T	T	T	T	T	T	T	T	T	T	T	T	T	T	T	T	T	T
	160	T	T	T	T	T	T	T	T	T	T	T	T	T	T	T	T	T	T	T	T	T	T	T	T
	200	T	T	T	T	T	T	T	T	T	T	T	T	T	T	T	T	T	T	T	T	T	T	T	T
	250	T	T	T	T	T	T	T	T	T	T	T	T	T	T	T	T	T	T	T	T	T	T	T	T
DPX³ 250 electronic release(2) (70 kA) with or without e.l.c.bs	40	-	-	-	-	-	-	-	-	-	-	-	-	T	T	T	T	T	T	T	T	T	T	T	T
	100	-	-	-	-	-	-	-	-	-	-	-	-	T	T	T	T	T	T	T	T	T	T	T	T
	160	-	-	-	-	-	-	-	-	-	-	-	-	T	T	T	T	T	T	T	T	T	T	T	T
	200	-	-	-	-	-	-	-	-	-	-	-	-	T	T	T	T	T	T	T	T	T	T	T	T
	250	-	-	-	-	-	-	-	-	-	-	-	-	T	T	T	T	T	T	T	T	T	T	T	T
DPX thermal magnetic (36 kA)	40	T	T	T	T	T	T	T	T	T	T	T	T	T	T	T	T	T	T	T	T	T	T	T	T
	63	T	T	T	T	T	T	T	T	T	T	T	T	T	T	T	T	T	T	T	T	T	T	T	T
	100	T	T	T	T	T	T	T	T	T	T	T	T	T	T	T	T	T	T	T	T	T	T	T	T
	160	T	T	T	T	T	T	T	T	T	T	T	T	T	T	T	T	T	T	T	T	T	T	T	T
	250	T	T	T	T	T	T	T	T	T	T	T	T	T	T	T	T	T	T	T	T	T	T	T	T
DPX-H 250 thermal magnetic (70 kA)	40	-	-	-	-	-	-	-	-	-	-	-	-	T	T	T	T	T	T	T	T	T	T	T	T
	63	-	-	-	-	-	-	-	-	-	-	-	-	T	T	T	T	T	T	T	T	T	T	T	T
	100	-	-	-	-	-	-	-	-	-	-	-	-	T	T	T	T	T	T	T	T	T	T	T	T
	160	-	-	-	-	-	-	-	-	-	-	-	-	T	T	T	T	T	T	T	T	T	T	T	T
	250	-	-	-	-	-	-	-	-	-	-	-	-	T	T	T	T	T	T	T	T	T	T	T	T
DPX 250 electronic release(1) S1 and S2 (36 kA)	40	T	T	T	T	T	T	T	T	T	T	T	T	T	T	T	T	T	T	T	T	T	T	T	T
	100	T	T	T	T	T	T	T	T	T	T	T	T	T	T	T	T	T	T	T	T	T	T	T	T
	160	T	T	T	T	T	T	T	T	T	T	T	T	T	T	T	T	T	T	T	T	T	T	T	T
	250	T	T	T	T	T	T	T	T	T	T	T	T	T	T	T	T	T	T	T	T	T	T	T	T
DPX 250 electronic release(2) S1 and S2 (36 kA)	40	T	T	T	T	T	T	T	T	T	T	T	T	T	T	T	T	T	T	T	T	T	T	T	T
	100	T	T	T	T	T	T	T	T	T	T	T	T	T	T	T	T	T	T	T	T	T	T	T	T
	160	T	T	T	T	T	T	T	T	T	T	T	T	T	T	T	T	T	T	T	T	T	T	T	T
	250	T	T	T	T	T	T	T	T	T	T	T	T	T	T	T	T	T	T	T	T	T	T	T	T
DPX-H 250 electronic release(1) S1 and S2 (70 kA)	40	-	-	-	-	-	-	-	-	-	-	-	-	T	T	T	T	T	T	T	T	T	T	T	T
	100	-	-	-	-	-	-	-	-	-	-	-	-	T	T	T	T	T	T	T	T	T	T	T	T
	160	-	-	-	-	-	-	-	-	-	-	-	-	T	T	T	T	T	T	T	T	T	T	T	T
	250	-	-	-	-	-	-	-	-	-	-	-	-	T	T	T	T	T	T	T	T	T	T	T	T
DPX-H 250 electronic release(2) S1 and S2 (70 kA)	40	-	-	-	-	-	-	-	-	-	-	-	-	T	T	T	T	T	T	T	T	T	T	T	T
	100	-	-	-	-	-	-	-	-	-	-	-	-	T	T	T	T	T	T	T	T	T	T	T	T
	160	-	-	-	-	-	-	-	-	-	-	-	-	T	T	T	T	T	T	T	T	T	T	T	T
	250	-	-	-	-	-	-	-	-	-	-	-	-	T	T	T	T	T	T	T	T	T	T	T	T
DPX 630 thermal magnetic (36 kA)	250	T	T	T	T	T	T	T	T	T	T	T	T	T	T	T	T	T	T	T	T	T	T	T	T
	320	T	T	T	T	T	T	T	T	T	T	T	T	T	T	T	T	T	T	T	T	T	T	T	T
	400	T	T	T	T	T	T	T	T	T	T	T	T	T	T	T	T	T	T	T	T	T	T	T	T
	500	T	T	T	T	T	T	T	T	T	T	T	T	T	T	T	T	T	T	T	T	T	T	T	T
	630	-	T	T	T	T	T	-	T	T	T	T	T	-	T	T	T	T	T	T	T	T	T	T	T
DPX-H 630 thermal magnetic (70 kA)	250	-	-	-	-	-	-	-	-	-	-	-	-	T	T	T	T	T	T	T	T	T	T	T	T
	320	-	-	-	-	-	-	-	-	-	-	-	-	T	T	T	T	T	T	T	T	T	T	T	T
	400	-	-	-	-	-	-	-	-	-	-	-	-	T	T	T	T	T	T	T	T	T	T	T	T
	500	-	-	-	-	-	-	-	-	-	-	-	-	T	T	T	T	T	T	T	T	T	T	T	T
	630	-	-	-	-	-	-	-	-	-	-	-	-	-	T	T	T	T	T	T	T	T	T	T	T
DPX electronic release(1) S1 and S2 (36 kA)	250	T	T	T	T	T	T	T	T	T	T	T	T	T	T	T	T	T	T	T	T	T	T	T	T
	400	T	T	T	T	T	T	T	T	T	T	T	T	T	T	T	T	T	T	T	T	T	T	T	T
	630	-	T	T	T	T	T	-	T	T	T	T	T	-	T	T	T	T	T	T	T	T	T	T	T
DPX electronic release(2) S1 and S2 (36 kA)	250	T	T	T	T	T	T	T	T	T	T	T	T	T	T	T	T	T	T	T	T	T	T	T	T
	400	T	T	T	T	T	T	T	T	T	T	T	T	T	T	T	T	T	T	T	T	T	T	T	T
	630	-	T	T	T	T	T	-	T	T	T	T	T	-	T	T	T	T	T	T	T	T	T	T	T
DPX-H 630 electronic release(1) S1 and S2 (70 kA)	250	-	-	-	-	-	-	-	-	-	-	-	-	T	T	T	T	T	T	T	T	T	T	T	T
	400	-	-	-	-	-	-	-	-	-	-	-	-	T	T	T	T	T	T	T	T	T	T	T	T
	630	-	-	-	-	-	-	-	-	-	-	-	-	-	T	T	T	T	T	T	T	T	T	T	T
DPX-H 630 electronic release(2) S1 and S2 (70 kA)	250	-	-	-	-	-	-	-	-	-	-	-	-	T	T	T	T	T	T	T	T	T	T	T	T
	400	-	-	-	-	-	-	-	-	-	-	-	-	T	T	T	T	T	T	T	T	T	T	T	T
	630	-	-	-	-	-	-	-	-	-	-	-	-	-	T	T	T	T	T	T	T	T	T	T	T
DPX thermal magnetic (50 kA)	800	-	-	T	T	T	T	-	-	T	T	T	T	-	-	T	T	T	T	T	T	T	T	T	T
	1000	-	-	-	T	T	T	-	-	-	T	T	T	-	-	-	T	T	T	T	T	T	T	T	T
	1250	-	-	-	-	T	T	-	-	-	-	T	T	-	-	-	-	T	T	T	T	T	T	T	T
DPX-H 1250 thermal magnetic (70 kA)	800	-	-	-	-	-	-	-	-	-	-	-	-	-	-	T	T	T	T	T	T	T	T	T	T
	1000	-	-	-	-	-	-	-	-	-	-	-	-	-	-	-	T	T	T	T	T	T	T	T	T
	1250	-	-	-	-	-	-	-	-	-	-	-	-	-	-	-	-	T	T	T	T	T	T	T	T
DPX and DPX-H 1600 electronic release(1) S1 and S2 (50, 70 kA)	800	-	-	T	T	T	T	-	-	T	T	T	T	-	-	T	T	T	T	T	T	T	T	T	T
	1250	-	-	-	-	T	T	-	-	-	-	T	T	-	-	-	T	T	T	T	T	T	T	T	T
	1600	-	-	-	-	-	T	-	-	-	-	T	T	-	-	-	-	T	T	T	T	T	T	T	T
DPX and DPX-H 1600 electronic release(2) S1 and S2 (50, 70 kA)	800	-	-	T	T	T	T	-	-	T	T	T	T	-	-	T	T	T	T	T	T	T	T	T	T
	1250	-	-	-	-	T	T	-	-	-	-	T	T	-	-	-	T	T	T	T	T	T	T	T	T
	1600	-	-	-	-	-	T	-	-	-	-	T	T	-	-	-	-	T	T	T	T	T	T	T	T

T = total selectivity, up to downstream circuit breaker breaking capacity, according to IEC 60947-2
(1) Elecrtonic release, selector switch on "HIGH" - (2) Electronic release, selector switch on "LOW"

selectivity tables MCCBs/MCBs

Downstream MCB	In (A)	Upstream MCCB																								
		DPX³ 160 (16, 25, 36, 50 kA) with or without e.l.c.bs								DPX³ 250 (25, 36, 50, 70 kA) with or without e.l.c.bs				DPX³ 250 electronic release(1) (25, 36, 50, 70 kA) with or without e.l.c.bs				DPX³ 250 electronic release(2) (25, 36, 50, 70 kA) with or without e.l.c.bs				DPX and DPX-H 250 (36 and 70 kA)				
		16	25	40	63	80	100	125	160	100	160	200	250	40	100	160	250	40	100	160	250	40	63	100	160	250
LR 6000 DX-E 6000 / 6 kA B and C curves	≤ 6	T	T	T	T	T	T	T	T	T	T	T	T	T	T	T	T	T	T	T	T	T	T	T	T	T
	10	5	T	T	T	T	T	T	T	T	T	T	T	T	T	T	T	T	T	T	T	5	5	T	T	T
	13	-	T	T	T	T	T	T	T	T	T	T	T	T	T	T	T	T	T	T	T	4	4	T	T	T
	16	-	T	T	T	T	T	T	T	T	T	T	T	T	T	T	T	T	T	T	T	4	4	T	T	T
	20	-	-	5	5	5	5	T	T	T	T	T	T	5	T	T	T	5	T	T	T	4	4	T	T	T
	25	-	-	4.5	4.5	4.5	4.5	T	T	T	T	T	T	4	T	T	T	4	T	T	T	3	3	T	T	T
	32	-	-	-	-	4	4	T	T	5	T	T	T	-	5	T	T	-	5	T	T	-	2	5	T	T
	40	-	-	-	-	3	3	T	T	5	T	T	T	-	5	T	T	-	5	T	T	-	2	5	T	T
	50	-	-	-	-	3	3	5.5	5.5	4	T	T	T	-	4	T	T	-	4	T	T	-	-	4	T	T
	63	-	-	-	-	3	3	5	5	4	T	T	T	-	4	T	T	-	4	T	T	-	-	4	T	T
DX 6000 / 10 kA B and C curves	≤ 6	T	T	T	T	T	T	T	T	T	T	T	T	T	T	T	T	T	T	T	T	6	6	T	T	T
	10	7.5	7.5	7.5	7.5	7	7	T	T	T	T	T	T	T	T	T	T	T	T	T	T	5	5	T	T	T
	13	7.5	7.5	7.5	7.5	7	7	T	T	T	T	T	T	8	T	T	T	8	T	T	T	4	4	T	T	T
	16	-	6	6	6	6	6	T	T	T	T	T	T	6	T	T	T	6	T	T	T	4	4	T	T	T
	20	-	-	5	5	5	5	T	T	8	T	T	T	5	8	T	T	5	8	T	T	4	4	8	T	T
	25	-	-	4.5	4.5	4.5	4.5	8.5	8.5	6	T	T	T	4	6	T	T	4	6	T	T	3	3	6	T	T
	32	-	-	-	-	4	4	7	7	5	T	T	T	-	5	T	T	-	5	T	T	-	2	5	T	T
	40	-	-	-	-	3	3	6	6	5	T	T	T	-	5	T	T	-	5	T	T	-	-	5	T	T
	50	-	-	-	-	3	3	5.5	5.5	4	8	T	T	-	4	8	T	-	4	8	T	-	-	4	8	T
	63	-	-	-	-	3	3	5	5	4	8	T	T	-	4	8	T	-	4	8	T	-	-	4	8	T
DX-h 10000 / 25 kA B, C and Z curves and DX-MA 25 kA ≤ 6.3 A	≤ 6	T	T	T	T	T	T	T	T	T	T	T	T	T	T	T	T	T	T	T	T	6	6	T	T	T
	10	7.5	7.5	7.5	7.5	7	7	T	T	15	T	T	T	10	15	T	T	10	15	T	T	5	5	T	T	T
	13	-	7	7	7	7	7	T	T	10	T	T	T	7	10	T	T	7	10	T	T	4	4	T	T	T
	16	-	6	6	6	6	6	T	T	10	T	T	T	7	10	T	T	7	10	T	T	4	4	T	T	T
	20	-	-	5	5	5	5	T	T	8	T	T	T	5	8	T	T	5	8	T	T	4	4	8	T	T
	25	-	-	4.5	4.5	4.5	4.5	8.5	8.5	6	T	T	T	4	6	T	T	4	6	T	T	3	3	6	T	T
	32	-	-	-	-	4	4	7	7	5	T	T	T	-	5	T	T	-	5	T	T	-	2	5	T	T
	40	-	-	-	-	3	3	6	6	5	10	T	T	-	5	10	T	-	5	10	T	-	-	5	10	T
	50	-	-	-	-	3	3	5.5	5.5	4	8	T	T	-	4	8	T	-	4	8	T	-	-	4	8	T
	63	-	-	-	-	3	3	5	5	4	8	T	T	-	4	8	T	-	4	8	T	-	-	4	8	T
	80	-	-	-	-	-	-	5	5	-	8	T	T	-	-	8	T	-	-	8	T	-	-	-	8	T
	100	-	-	-	-	-	-	-	4	-	6	T	T	-	-	6	T	-	-	6	T	-	-	-	7.5	T
	125	-	-	-	-	-	-	-	2	-	3	8	8	-	-	3	8	-	-	3	8	-	-	-	3	8
DX-D 6000 / 15 kA D curve	≤ 6	6	12	12	T	T	T	T	T	T	T	T	T	T	T	T	T	T	T	T	T	6	6	T	T	T
	10	5	7	7	7.5	7.5	7	T	T	15	T	T	T	10	15	T	T	10	15	T	T	5	5	T	T	T
	13	-	6	6	6	6	6	T	T	10	T	T	T	7	10	T	T	7	10	T	T	4	4	T	T	T
	16	-	6	6	6	6	6	T	T	10	T	T	T	7	10	T	T	7	10	T	T	4	4	T	T	T
	20	-	-	5	5	5	5	T	T	8	T	T	T	5	8	T	T	5	8	T	T	4	4	8	T	T
	25	-	-	3.5	4.5	4.5	4.5	8.5	8.5	6	T	T	T	-	6	T	T	-	6	T	T	-	3	6	T	T
	32	-	-	-	4	4	4	7	7	5	T	T	T	-	5	T	T	-	5	T	T	-	2	5	T	T
	40	-	-	-	3	3	3	6	6	5	10	T	T	-	5	10	T	-	5	10	T	-	2	5	T	T
	50	-	-	-	-	3	3	5.5	5.5	4	8	T	T	-	4	8	T	-	4	8	T	-	-	4	8	T
	63	-	-	-	-	-	3	5	5	-	8	T	T	-	-	8	T	-	-	8	T	-	-	4	8	T
	80	-	-	-	-	-	-	4	4	-	8	T	T	-	-	8	T	-	-	8	T	-	-	-	7	T
	100	-	-	-	-	-	-	-	3	-	6	T	T	-	-	6	T	-	-	6	T	-	-	-	6.5	T
	125	-	-	-	-	-	-	-	-	-	-	8	8	-	-	-	8	-	-	-	8	-	-	-	2	7
DX-L 50 kA C curve	10	-	-	-	T	T	T	T	T	T	T	T	T	T	T	T	T	T	T	T	T	T	T	T	T	T
	16	-	-	-	T	T	T	T	T	40	T	T	T	T	40	T	T	T	40	T	T	-	-	40	T	T
	20	-	-	-	20	20	20	T	T	33	T	T	T	20	33	T	T	20	33	T	T	-	-	33	T	T
	25	-	-	-	15	15	15	T	T	28	T	T	T	-	28	T	T	-	28	T	T	-	-	28	T	T
	32	-	-	-	10	10	10	20	20	20	T	T	T	-	20	T	T	-	20	T	T	-	-	20	T	T
	40	-	-	-	7	7	7	17	17	13	T	T	T	-	13	T	T	-	13	T	T	-	-	13	T	T
	50	-	-	-	3	3	3	8	8	8	20	T	T	-	8	20	T	-	8	20	T	-	-	8	20	T
	63	-	-	-	3	3	3	8	8	8	20	T	T	-	8	20	T	-	8	20	T	-	-	8	20	T

T = total selectivity, up to downstream circuit breaker breaking capacity, according to IEC 60947-2
(1) Elecrtonic release, selector switch on "HIGH" - (2) Electronic release, selector switch on "LOW"

DPX and DPX-H 250 electronic release[1] S1, S2 (36 and 70 kA)				DPX and DPX-H 250 electronic release[1] S1, S2 (36 and 70 kA)				DPX and DPX-H 630 (36 and 70 kA)					DPX and DPX-H 630 electronic release[1] S1, S2 (36 and 70 kA)			DPX and DPX-H 630 electronic release[2] S1, S2 (36 and 70 kA)			DPX and DPX-H 1250 (36 and 70 kA)			DPX and DPX-H 1600 electronic release[1] S1, S2 (50 and 70 kA)			DPX and DPX-H 1600 electronic release[2] S1, S2 (50 and 70 kA)		
40	100	160	250	40	100	160	250	250	320	400	500	630	250	400	630	250	400	630	800	1000	1250	800	1250	1600	800	1250	1600
T	T	T	T	T	T	T	T	T	T	T	T	T	T	T	T	T	T	T	T	T	T	T	T	T	T	T	T
T	T	T	T	T	T	T	T	T	T	T	T	T	T	T	T	T	T	T	T	T	T	T	T	T	T	T	T
T	T	T	T	T	T	T	T	T	T	T	T	T	T	T	T	T	T	T	T	T	T	T	T	T	T	T	T
T	T	T	T	T	T	T	T	T	T	T	T	T	T	T	T	T	T	T	T	T	T	T	T	T	T	T	T
5	T	T	T	5	T	T	T	T	T	T	T	T	T	T	T	T	T	T	T	T	T	T	T	T	T	T	T
4	T	T	T	4	T	T	T	T	T	T	T	T	T	T	T	T	T	T	T	T	T	T	T	T	T	T	T
-	5	T	T	-	5	T	T	T	T	T	T	T	T	T	T	T	T	T	T	T	T	T	T	T	T	T	T
-	5	T	T	-	5	T	T	T	T	T	T	T	T	T	T	T	T	T	T	T	T	T	T	T	T	T	T
-	4	T	T	-	4	T	T	T	T	T	T	T	T	T	T	T	T	T	T	T	T	T	T	T	T	T	T
-	4	T	T	-	4	T	T	T	T	T	T	T	T	T	T	T	T	T	T	T	T	T	T	T	T	T	T
T	T	T	T	T	T	T	T	T	T	T	T	T	T	T	T	T	T	T	T	T	T	T	T	T	T	T	T
T	T	T	T	T	T	T	T	T	T	T	T	T	T	T	T	T	T	T	T	T	T	T	T	T	T	T	T
8	T	T	T	8	T	T	T	T	T	T	T	T	T	T	T	T	T	T	T	T	T	T	T	T	T	T	T
6	T	T	T	6	T	T	T	T	T	T	T	T	T	T	T	T	T	T	T	T	T	T	T	T	T	T	T
5	8	T	T	5	8	T	T	T	T	T	T	T	T	T	T	T	T	T	T	T	T	T	T	T	T	T	T
4	6	T	T	4	6	T	T	T	T	T	T	T	T	T	T	T	T	T	T	T	T	T	T	T	T	T	T
-	5	T	T	-	5	T	T	T	T	T	T	T	T	T	T	T	T	T	T	T	T	T	T	T	T	T	T
-	5	T	T	-	5	T	T	T	T	T	T	T	T	T	T	T	T	T	T	T	T	T	T	T	T	T	T
-	4	8	T	-	4	8	T	T	T	T	T	T	T	T	T	T	T	T	T	T	T	T	T	T	T	T	T
-	4	8	T	-	4	8	T	T	T	T	T	T	T	T	T	T	T	T	T	T	T	T	T	T	T	T	T
T	T	T	T	T	T	T	T	T	T	T	T	T	T	T	T	T	T	T	T	T	T	T	T	T	T	T	T
10	T	T	T	10	T	T	T	T	T	T	T	T	T	T	T	T	T	T	T	T	T	T	T	T	T	T	T
7	T	T	T	7	T	T	T	T	T	T	T	T	T	T	T	T	T	T	T	T	T	T	T	T	T	T	T
7	T	T	T	7	T	T	T	T	T	T	T	T	T	T	T	T	T	T	T	T	T	T	T	T	T	T	T
5	8	T	T	5	8	T	T	T	T	T	T	T	T	T	T	T	T	T	T	T	T	T	T	T	T	T	T
4	6	T	T	4	6	T	T	T	T	T	T	T	T	T	T	T	T	T	T	T	T	T	T	T	T	T	T
-	5	T	T	-	5	T	T	T	T	T	T	T	T	T	T	T	T	T	T	T	T	T	T	T	T	T	T
-	5	10	T	-	5	10	T	T	T	T	T	T	T	T	T	T	T	T	T	T	T	T	T	T	T	T	T
-	4	8	T	-	4	8	T	T	T	T	T	T	T	T	T	T	T	T	T	T	T	T	T	T	T	T	T
-	4	8	T	-	4	8	T	T	T	T	T	T	T	T	T	T	T	T	T	T	T	T	T	T	T	T	T
-	-	8	T	-	-	8	T	T	T	T	T	T	T	T	T	T	T	T	T	T	T	T	T	T	T	T	T
-	-	6	T	-	-	6	T	T	T	T	T	T	T	T	T	T	T	T	T	T	T	T	T	T	T	T	T
-	-	3	8	-	-	3	8	T	T	T	T	T	T	T	T	T	T	T	T	T	T	T	T	T	T	T	T
T	T	T	T	T	T	T	T	T	T	T	T	T	T	T	T	T	T	T	T	T	T	T	T	T	T	T	T
10	T	T	T	10	T	T	T	T	T	T	T	T	T	T	T	T	T	T	T	T	T	T	T	T	T	T	T
7	T	T	T	7	T	T	T	T	T	T	T	T	T	T	T	T	T	T	T	T	T	T	T	T	T	T	T
7	T	T	T	7	T	T	T	T	T	T	T	T	T	T	T	T	T	T	T	T	T	T	T	T	T	T	T
5	8	T	T	5	8	T	T	T	T	T	T	T	T	T	T	T	T	T	T	T	T	T	T	T	T	T	T
-	6	T	T	-	6	T	T	T	T	T	T	T	T	T	T	T	T	T	T	T	T	T	T	T	T	T	T
-	5	T	T	-	5	T	T	T	T	T	T	T	T	T	T	T	T	T	T	T	T	T	T	T	T	T	T
-	5	T	T	-	5	T	T	T	T	T	T	T	T	T	T	T	T	T	T	T	T	T	T	T	T	T	T
-	4	8	T	-	4	8	T	T	T	T	T	T	T	T	T	T	T	T	T	T	T	T	T	T	T	T	T
-	4	8	T	-	4	8	T	T	T	T	T	T	T	T	T	T	T	T	T	T	T	T	T	T	T	T	T
-	-	8	T	-	-	8	T	T	T	T	T	T	T	T	T	T	T	T	T	T	T	T	T	T	T	T	T
-	-	6	T	-	-	6	T	T	T	T	T	T	T	T	T	T	T	T	T	T	T	T	T	T	T	T	T
-	-	3	7	-	-	3	7	T	T	T	T	T	T	T	T	T	T	T	T	T	T	T	T	T	T	T	T
T	T	T	T	T	T	T	T	T	T	T	T	T	T	T	T	T	T	T	T	T	T	T	T	T	T	T	T
-	40	T	T	30	40	T	T	T	T	T	T	T	T	T	T	T	T	T	T	T	T	T	T	T	T	T	T
-	33	T	T	20	33	T	T	T	T	T	T	T	T	T	T	T	T	T	T	T	T	T	T	T	T	T	T
-	28	T	T	15	28	T	T	T	T	T	T	T	T	T	T	T	T	T	T	T	T	T	T	T	T	T	T
-	20	T	T	-	20	T	T	T	T	T	T	T	T	T	T	T	T	T	T	T	T	T	T	T	T	T	T
-	13	T	T	-	13	T	T	T	T	T	T	T	T	T	T	T	T	T	T	T	T	T	T	T	T	T	T
-	8	20	T	-	8	20	T	T	T	T	T	T	T	T	T	T	T	T	T	T	T	T	T	T	T	T	T
-	8	20	T	-	8	20	T	T	T	T	T	T	T	T	T	T	T	T	T	T	T	T	T	T	T	T	T

back-up between MCCBs and MCBs (in)

■ Breaking capacity in 3-phase networks (+N) 400/415 V according to IEC 60947-2

Downstream MCB	In (A)	Upstream MCCB: DPX³ 160 with or without e.l.c.bs 16 kA								DPX³ 160 with or without e.l.c.bs 25 kA								DPX³ 160 with or without e.l.c.bs 36 and 50 kA								DPX³ 250 with or without e.l.c.bs 25 kA			
		16 A	25 A	40 A	63 A	80 A	100 A	125 A	160 A	16 A	25 A	40 A	63 A	80 A	100 A	125 A	160 A	16 A	25 A	40 A	63 A	80 A	100 A	125 A	160 A	100	160	200	250
DX 6000 - 6 kA B and C curve	≤ 6	16	16	16	16	16	16	16	16	25	25	25	25	25	25	25	25	25	25	25	25	25	25	25	25	25	25	25	25
	10	16	16	16	16	16	16	16	16	25	25	25	25	25	25	25	25	25	25	25	25	25	25	25	25	25	25	25	25
	13	16	16	16	16	16	16	16	16	25	25	25	25	25	25	25	25	25	25	25	25	25	25	25	25	25	25	25	25
	16		16	16	16	16	16	16	16		25	25	25	25	25	25	25		25	25	25	25	25	25	25	25	25	25	25
	20		16	16	16	16	16	16	16		25	25	25	25	25	25	25		25	25	25	25	25	25	25	25	25	25	25
	25			16	16	16	16	16	16			25	25	25	25	25	25			25	25	25	25	25	25	25	25	25	25
	32			16	16	16	16	16	16			25	25	25	25	25	25			25	25	25	25	25	25	25	25	25	25
	40				16	16	16	16	16				25	25	25	25	25				25	25	25	25	25	25	25	25	25
	50				16	16	16	16	16				25	25	25	25	25				25	25	25	25	25	25	25	25	25
	63					16	16	16	16					25	25	25	25					25	25	25	25	25	25	25	25
DX 6000 / 10 kA B and C curves	≤ 6	16	16	16	16	16	16	16	16	25	25	25	25	25	25	25	25	25	25	25	25	25	25	25	25	25	25	25	25
	10	16	16	16	16	16	16	16	16	25	25	25	25	25	25	25	25	25	25	25	25	25	25	25	25	25	25	25	25
	13	16	16	16	16	16	16	16	16	25	25	25	25	25	25	25	25	25	25	25	25	25	25	25	25	25	25	25	25
	16		16	16	16	16	16	16	16		25	25	25	25	25	25	25		25	25	25	25	25	25	25	25	25	25	25
	20		16	16	16	16	16	16	16		25	25	25	25	25	25	25		25	25	25	25	25	25	25	25	25	25	25
	25			16	16	16	16	16	16			25	25	25	25	25	25			25	25	25	25	25	25	25	25	25	25
	32			16	16	16	16	16	16			25	25	25	25	25	25			25	25	25	25	25	25	25	25	25	25
	40				16	16	16	16	16				25	25	25	25	25				25	25	25	25	25	25	25	25	25
	50				16	16	16	16	16				25	25	25	25	25				25	25	25	25	25	25	25	25	25
	63					16	16	16	16					25	25	25	25					25	25	25	25	25	25	25	25
DX-h 10000 / 25 kA B, C and Z curves and DX-MA 25 kA ≤ 6.3 A	≤ 6	16	16	16	16	16	16	16	16	25	25	25	25	25	25	25	25	25	25	25	25	25	25	25	25	25	25	25	25
	10	16	16	16	16	16	16	16	16	25	25	25	25	25	25	25	25	25	25	25	25	25	25	25	25	25	25	25	25
	13	16	16	16	16	16	16	16	16	25	25	25	25	25	25	25	25	25	25	25	25	25	25	25	25	25	25	25	25
	16		16	16	16	16	16	16	16		25	25	25	25	25	25	25		25	25	25	25	25	25	25	25	25	25	25
	20		16	16	16	16	16	16	16		25	25	25	25	25	25	25		25	25	25	25	25	25	25	25	25	25	25
	25			16	16	16	16	16	16			25	25	25	25	25	25			25	25	25	25	25	25	25	25	25	25
	32			16	16	16	16	16	16			25	25	25	25	25	25			25	25	25	25	25	25	25	25	25	25
	40				16	16	16	16	16				25	25	25	25	25				25	25	25	25	25	25	25	25	25
	50				16	16	16	16	16				25	25	25	25	25				25	25	25	25	25	25	25	25	25
	63					16	16	16	16					25	25	25	25					25	25	25	25	25	25	25	25
	80						16	16	16						20	20	20						20	20	20	20	20	20	20
	100							16	16							20	20							20	20		20	20	20
	125								16								16								16		16	16	16
DX-D 6000 / 15 kA D curve	≤ 6	16	16	16	16	16	16	16	16	25	25	25	25	25	25	25	25	25	25	25	25	25	25	25	25	25	25	25	25
	10	16	16	16	16	16	16	16	16	25	25	25	25	25	25	25	25	25	25	25	25	25	25	25	25	25	25	25	25
	13	16	16	16	16	16	16	16	16	25	25	25	25	25	25	25	25	25	25	25	25	25	25	25	25	25	25	25	25
	16		16	16	16	16	16	16	16		25	25	25	25	25	25	25		25	25	25	25	25	25	25	25	25	25	25
	20		16	16	16	16	16	16	16		25	25	25	25	25	25	25		25	25	25	25	25	25	25	25	25	25	25
	25			16	16	16	16	16	16			25	25	25	25	25	25			25	25	25	25	25	25	25	25	25	25
	32			16	16	16	16	16	16			25	25	25	25	25	25			25	25	25	25	25	25	25	25	25	25
	40				16	16	16	16	16				25	25	25	25	25				25	25	25	25	25	25	25	25	25
	50				16	16	16	16	16				25	25	25	25	25				25	25	25	25	25	25	25	25	25
	63					16	16	16	16					25	25	25	25					25	25	25	25	25	25	25	25
	80						16	16	16						20	20	20						20	20	20	20	20	20	20
	100							16	16							20	20							20	20		20	20	20
	125								16								16								16		16	16	16

■ Breaking capacity in 3-phase networks +N 230/240 V according to IEC 60947-2

Breaking capacity for a downstream 1P+N or 2P MCB, backed-up by an upstream 2P or 4P MCB, in 230 V networks TT or TNS earthing systems

Downstream MCB	In (A)	Upstream MCCB: DPX³ 160 with or without e.l.c.bs 16 kA								DPX³ 160 with or without e.l.c.bs 25 kA								DPX³ 160 with or without e.l.c.bs 36 and 50 kA								DPX³ 250 with or without e.l.c.bs 25 kA			
		16 A	25 A	40 A	63 A	80 A	100 A	125 A	160 A	16 A	25 A	40 A	63 A	80 A	100 A	125 A	160 A	16 A	25 A	40 A	63 A	80 A	100 A	125 A	160 A	100	160	200	250
DX 6000 - 6 kA B and C curve	≤ 6	22	22	22	22	22	22	22	22	40	40	40	40	40	40	40	40	50	50	50	50	50	50	50	50	40	40	40	40
	10	22	22	22	22	22	22	22	22	40	40	40	40	40	40	40	40	50	50	50	50	50	50	50	50	40	40	40	40
	13	22	22	22	22	22	22	22	22	40	40	40	40	40	40	40	40	50	50	50	50	50	50	50	50	40	40	40	40
	16		22	22	22	22	22	22	22		40	40	40	40	40	40	40		50	50	50	50	50	50	50	40	40	40	40
	20		22	22	22	22	22	22	22		40	40	40	40	40	40	40		50	50	50	50	50	50	50	40	40	40	40
	25			22	22	22	22	22	22			40	40	40	40	40	40			50	50	50	50	50	50	40	40	40	40
	32			22	22	22	22	22	22			40	40	40	40	40	40			50	50	50	50	50	50	40	40	40	40
	40				22	22	22	22	22				40	40	40	40	40				50	50	50	50	50	40	40	40	40
	50				22	22	22	22	22				36	36	36	36	36				36	36	36	36	36	36	36	36	36
	63					22	22	22	22					30	30	30	30					30	30	30	30	30	30	30	30
DX 6000 / 10 kA B and C curves	≤ 6	22	22	22	22	22	22	22	22	40	40	40	40	40	40	40	40	50	50	50	50	50	50	50	50	40	40	40	40
	10	22	22	22	22	22	22	22	22	40	40	40	40	40	40	40	40	50	50	50	50	50	50	50	50	40	40	40	40
	13	22	22	22	22	22	22	22	22	40	40	40	40	40	40	40	40	50	50	50	50	50	50	50	50	40	40	40	40
	16		22	22	22	22	22	22	22		40	40	40	40	40	40	40		50	50	50	50	50	50	50	40	40	40	40
	20		22	22	22	22	22	22	22		40	40	40	40	40	40	40		50	50	50	50	50	50	50	40	40	40	40
	25			22	22	22	22	22	22			40	40	40	40	40	40			50	50	50	50	50	50	40	40	40	40
	32			22	22	22	22	22	22			40	40	40	40	40	40			50	50	50	50	50	50	40	40	40	40
	40				22	22	22	22	22				40	40	40	40	40				50	50	50	50	50	40	40	40	40
	50				22	22	22	22	22				36	36	36	36	36				36	36	36	36	36	36	36	36	36
	63					22	22	22	22					30	30	30	30					30	30	30	30	30	30	30	30
DX-h 10000 / 25 kA B, C and Z curves and DX-MA 25 kA ≤ 6.3 A	≤ 6									40	40	40	40	40	40	40	40	50	50	50	50	50	50	50	50	40	40	40	40
	10									40	40	40	40	40	40	40	40	50	50	50	50	50	50	50	50	40	40	40	40
	13									40	40	40	40	40	40	40	40	50	50	50	50	50	50	50	50	40	40	40	40
	16										40	40	40	40	40	40	40		50	50	50	50	50	50	50	40	40	40	40
	20										40	40	40	40	40	40	40		50	50	50	50	50	50	50	40	40	40	40
	25											40	40	40	40	40	40			50	50	50	50	50	50	40	40	40	40
	32											40	40	40	40	40	40			50	50	50	50	50	50	40	40	40	40
	40												40	40	40	40	40				50	50	50	50	50	40	40	40	40
	50												36	36	36	36	36				36	36	36	36	36	36	36	36	36
	63													30	30	30	30					30	30	30	30	30	30	30	30
	80														25	25	25						25	25	25	25	25	25	25
	100															25	25							25	25		25	25	25
	125																25								25		25	25	25
DX-D 6000 / 15 kA D curve	≤ 6	22	22	22	22	22	22	22	22	40	40	40	40	40	40	40	40	50	50	50	50	50	50	50	50	40	40	40	40
	10	22	22	22	22	22	22	22	22	40	40	40	40	40	40	40	40	50	50	50	50	50	50	50	50	40	40	40	40
	13	22	22	22	22	22	22	22	22	40	40	40	40	40	40	40	40	50	50	50	50	50	50	50	50	40	40	40	40
	16		22	22	22	22	22	22	22		40	40	40	40	40	40	40		50	50	50	50	50	50	50	40	40	40	40
	20		22	22	22	22	22	22	22		40	40	40	40	40	40	40		50	50	50	50	50	50	50	40	40	40	40
	25			22	22	22	22	22	22			40	40	40	40	40	40			50	50	50	50	50	50	40	40	40	40
	32			22	22	22	22	22	22			40	40	40	40	40	40			50	50	50	50	50	50	40	40	40	40
	40				22	22	22	22	22				40	40	40	40	40				50	50	50	50	50	40	40	40	40
	50				22	22	22	22	22				36	36	36	36	36				36	36	36	36	36	36	36	36	36
	63					22	22	22	22					30	30	30	30					30	30	30	30	30	30	30	30
	80						22	22	22						25	25	25						25	25	25	25	25	25	25
	100							22	22							25	25							25	25		25	25	25
	125								22								25								25		25	25	25

Upstream MCCB																																			
DPX³ 250 with or without e.l.c.bs 36, 50 and 70 kA				DPX³ 250 electronic release, LOW or HIGH with or without e.l.c.bs 25 kA				DPX³ 250 electronic release, LOW or HIGH with or without e.l.c.bs 36, 50 and 70 kA				DPX and DPX-H 250 36 and 70 kA					DPX and DPX-H 250 electronic release S1, S2 LOW or HIGH 36 and 70 kA				DPX and DPX-H 630 36 and 70 kA					DPX and DPX-H 630 electronic release S1, S2 LOW or HIGH 36 and 70 kA			DPX and DPX-H 1250 36 and 70 kA			DPX and DPX-H 1600 electronic release S1, S2 LOW or HIGH 50 and 70 kA		
100	160	200	250	40	100	160	250	40	100	160	250	40	63	100	160	250	40	100	160	250	250	320	400	500	630	250	400	630	800	1000	1250	800	1250	1600
25	25	25	25	25	25	25	25	25	25	25	25	25	25	25	25	25	25	25	25	25	25	25	25	25	25	25	25	25	25	25	25	25	25	25
25	25	25	25	25	25	25	25	25	25	25	25	25	25	25	25	25	25	25	25	25	25	25	25	25	25	25	25	25	25	25	25	25	25	25
25	25	25	25	25	25	25	25	25	25	25	25	25	25	25	25	25	25	25	25	25	25	25	25	25	25	25	25	25	25	25	25	25	25	25
25	25	25	25	25	25	25	25	25	25	25	25	25	25	25	25	25	25	25	25	25	25	25	25	25	25	25	25	25	25	25	25	25	25	25
25	25	25	25	25	25	25	25	25	25	25	25	25	25	25	25	25	25	25	25	25	25	25	25	25	25	25	25	25	25	25	25	25	25	25
25	25	25	25	25	25	25	25	25	25	25	25	25	25	25	25	25	25	25	25	25	25	25	25	25	25	25	25	25	20	20	20	20	20	20
25	25	25	25		25	25	25		25	25	25		25	25	25	20		25	25	20	20	20	20	20	20	20	20	20	15	15	15	15	15	15
25	25	25	25		25	25	25		25	25	25		25	25	20	15		25	20	15	15	15	15	15	15	15	15	15	12.5	12.5	12.5	12.5	12.5	12.5
25	25	25	25		25	25	25		25	25	25			20	15	15		20	15	15	15	15	15	15	15	15	15	15	12.5	12.5	12.5	12.5	12.5	12.5
25	25	25	25	25	25	25	25	25	25	25	25	25	25	25	25	25	25	25	25	25	25	25	25	25	25	25	25	25	25	25	25	25	25	25
25	25	25	25	25	25	25	25	25	25	25	25	25	25	25	25	25	25	25	25	25	25	25	25	25	25	25	25	25	25	25	25	25	25	25
25	25	25	25	25	25	25	25	25	25	25	25	25	25	25	25	25	25	25	25	25	25	25	25	25	25	25	25	25	25	25	25	25	25	25
25	25	25	25	25	25	25	25	25	25	25	25	25	25	25	25	25	25	25	25	25	25	25	25	25	25	25	25	25	25	25	25	25	25	25
25	25	25	25	25	25	25	25	25	25	25	25	25	25	25	25	25	25	25	25	25	25	25	25	25	25	25	25	25	25	25	25	25	25	25
25	25	25	25	25	25	25	25	25	25	25	25	25	25	25	25	25	25	25	25	25	25	25	25	25	25	25	25	25	20	20	20	20	20	20
25	25	25	25	25	25	25	25	25	25	25	25	25	25	25	25	25	25	25	25	25	25	25	25	25	25	25	25	25	15	15	15	15	15	15
25	25	25	25		25	25	25		25	25	25		25	25	25	20		25	25	20	20	20	20	20	20	20	20	20	15	15	15	15	15	15
25	25	25	25		25	25	25		25	25	25		25	25	20	15		25	20	15	15	15	15	15	15	15	15	15	12.5	12.5	12.5	12.5	12.5	12.5
25	25	25	25		25	25	25		25	25	25			20	15	15		20	15	15	15	15	15	15	15	15	15	15	12.5	12.5	12.5	12.5	12.5	12.5
25	25	25	25	25	25	25	25	25	25	25	25	25	25	25	25	25	25	25	25	25	25	25	25	25	25	25	25	25	25	25	25	25	25	25
25	25	25	25	25	25	25	25	25	25	25	25	25	25	25	25	25	25	25	25	25	25	25	25	25	25	25	25	25	25	25	25	25	25	25
25	25	25	25	25	25	25	25	25	25	25	25	25	25	25	25	25	25	25	25	25	25	25	25	25	25	25	25	25	25	25	25	25	25	25
25	25	25	25	25	25	25	25	25	25	25	25	25	25	25	25	25	25	25	25	25	25	25	25	25	25	25	25	25	25	25	25	25	25	25
25	25	25	25	25	25	25	25	25	25	25	25	25	25	25	25	25	25	25	25	25	25	25	25	25	25	25	25	25	20	20	20	20	20	20
25	25	25	25		25	25	25		25	25	25		25	25	25	20		25	25	20	20	20	20	20	20	20	20	20	15	15	15	15	15	15
25	25	25	25		25	25	25		25	25	25		25	25	20	15		25	20	15	15	15	15	15	15	15	15	15	12.5	12.5	12.5	12.5	12.5	12.5
25	25	25	25		25	25	25		25	25	25			20	15	15		20	15	15	15	15	15	15	15	15	15	15	12.5	12.5	12.5	12.5	12.5	12.5
20	20	20	20		20	20	20		20	20	20			20	20	20		20	20	20	20	20	20	15	15	20	20	15	12.5	12.5	12.5	12.5	12.5	12.5
	20	20	20			20	20			20	20				20	20			20	20	20	20	20	15	15	20	20	15	12.5	12.5	12.5	12.5	12.5	12.5
	16	16	16			16	16			16	16				15	15			15	15	15	15	15	12.5	12.5	15	15	12.5	12.5	12.5	12.5	12.5	12.5	12.5
25	25	25	25	25	25	25	25	25	25	25	25	25	25	25	25	25	25	25	25	25	25	25	25	25	25	25	25	25	25	25	25	25	25	25
25	25	25	25	25	25	25	25	25	25	25	25	25	25	25	25	25	25	25	25	25	25	25	25	25	25	25	25	25	25	25	25	25	25	25
25	25	25	25	25	25	25	25	25	25	25	25	25	25	25	25	25	25	25	25	25	25	25	25	25	25	25	25	25	25	25	25	25	25	25
25	25	25	25	25	25	25	25	25	25	25	25	25	25	25	25	25	25	25	25	25	25	25	25	25	25	25	25	25	25	25	25	25	25	25
25	25	25	25	25	25	25	25	25	25	25	25	25	25	25	25	25	25	25	25	25	25	25	25	25	25	25	25	25	20	20	20	20	20	20
25	25	25	25	25	25	25	25	25	25	25	25	25	25	25	25	25	25	25	25	25	25	25	25	25	25	25	25	25	15	15	15	15	15	15
25	25	25	25		25	25	25		25	25	25		25	25	25	20		25	25	20	20	20	20	20	20	20	20	20	15	15	15	15	15	15
25	25	25	25		25	25	25		25	25	25		25	25	20	15		25	20	15	15	15	15	15	15	15	15	15	12.5	12.5	12.5	12.5	12.5	12.5
25	25	25	25		25	25	25		25	25	25			20	15	15		20	15	15	15	15	15	15	15	15	15	15	12.5	12.5	12.5	12.5	12.5	12.5
20	20	20	20		20	20	20		20	20	20			20	20	20		20	20	20	20	20	20	15	15	20	20	15	12.5	12.5	12.5	12.5	12.5	12.5
	20	20	20			20	20			20	20				20	20			20	20	20	20	20	15	15	20	20	15	12.5	12.5	12.5	12.5	12.5	12.5
	16	16	16			16	16			16	16				15	15			15	15	15	15	15	12.5	12.5	15	15	12.5	12.5	12.5	12.5	12.5	12.5	12.5

Upstream MCCB																																			
DPX³ 250 with or without e.l.c.bs 36, 50 and 70 kA				DPX³ 250 electronic release, LOW or HIGH with or without e.l.c.bs 25 kA				DPX³ 250 electronic release, LOW or HIGH with or without e.l.c.bs 36, 50 and 70 kA				DPX and DPX-H 250 36 and 70 kA					DPX and DPX-H 250 electronic release S1, S2 LOW or HIGH 36 and 70 kA				DPX and DPX-H 630 36 and 70 kA					DPX and DPX-H 630 electronic release S1, S2 LOW or HIGH 36 and 70 kA			DPX and DPX-H 1250 36 and 70 kA			DPX and DPX-H 1600 electronic release S1, S2 LOW or HIGH 50 and 70 kA		
100	160	200	250	40	100	160	250	40	100	160	250	40	63	100	160	250	40	100	160	250	250	320	400	500	630	250	400	630	800	1000	1250	800	1250	1600
40	40	40	40	40	40	40	40	40	40	40	40	50	50	50	50	50	50	50	50	50	50	50	50	50	50	50	50	50	50	50	50	50	50	50
40	40	40	40	40	40	40	40	40	40	40	40	50	50	50	50	50	50	50	50	50	50	50	50	50	50	50	50	50	50	50	50	50	50	50
40	40	40	40	40	40	40	40	40	40	40	40	50	50	50	50	50	50	50	50	50	50	50	50	50	50	50	50	50	50	50	50	50	50	50
40	40	40	40	40	40	40	40	40	40	40	40	50	50	50	50	50	50	50	50	50	50	50	50	50	50	50	50	50	50	50	50	50	50	50
40	40	40	40	40	40	40	40	40	40	40	40	50	50	50	50	50	50	50	50	50	50	50	50	50	50	50	50	50	50	50	50	50	50	50
40	40	40	40		40	40	40		40	40	40		50	50	50	50		50	50	50	50	50	50	50	50	50	50	50	50	50	50	50	50	50
36	36	36	36		36	36	36		36	36	36		45	45	36	30		30	30	30	30	30	30	30	30	30	30	30	25	25	25	25	25	25
30	30	30	30		30	30	30		30	30	30			30	30	30		30	30	30	30	30	30	30	30	30	30	30	25	25	25	25	25	25
50	50	50	50	40	40	40	40	50	50	50	50	50	50	50	50	50	50	50	50	50	50	50	50	50	50	50	50	50	50	50	50	50	50	50
50	50	50	50	40	40	40	40	50	50	50	50	50	50	50	50	50	50	50	50	50	50	50	50	50	50	50	50	50	50	50	50	50	50	50
50	50	50	50	40	40	40	40	50	50	50	50	50	50	50	50	50	50	50	50	50	50	50	50	50	50	50	50	50	50	50	50	50	50	50
50	50	50	50	40	40	40	40	50	50	50	50	50	50	50	50	50	50	50	50	50	50	50	50	50	50	50	50	50	50	50	50	50	50	50
50	50	50	50	40	40	40	40	50	50	50	50	50	50	50	50	50	50	50	50	50	50	50	50	50	50	50	50	50	50	50	50	50	50	50
50	50	50	50		40	40	40		50	50	50		50	50	50	50		50	50	50	50	50	50	50	50	50	50	50	50	50	50	50	50	50
36	36	36	36		36	36	36		36	36	36		45	45	36	30		45	36	30	30	30	30	30	30	30	30	30	25	25	25	25	25	25
30	30	30	30		30	30	30		30	30	30			45	30	30		45	30	30	30	30	30	30	30	30	30	30	25	25	25	25	25	25
25	25	25	25		25	25	25		25	25	25			25	25	25		25	25	25	25	25	25	25	25	25	25	25	25	25	25	25	25	25
	25	25	25			25	25			25	25				25	25			25	25	25	25	25	25	25	25	25	25	25	25	25	25	25	25
	25	25	25			25	25			25	25				25	25			25	25	25	25	25	25	25	25	25	25	25	25	25	25	25	25
50	50	50	50	40	40	40	40	50	50	50	50	50	50	50	50	50	50	50	50	50	50	50	50	50	50	50	50	50	50	50	50	50	50	50
50	50	50	50	40	40	40	40	50	50	50	50	50	50	50	50	50	50	50	50	50	50	50	50	50	50	50	50	50	50	50	50	50	50	50
50	50	50	50	40	40	40	40	50	50	50	50	50	50	50	50	50	50	50	50	50	50	50	50	50	50	50	50	50	50	50	50	50	50	50
50	50	50	50	40	40	40	40	50	50	50	50	50	50	50	50	50	50	50	50	50	50	50	50	50	50	50	50	50	50	50	50	50	50	50
50	50	50	50	40	40	40	40	50	50	50	50	50	50	50	50	50	50	50	50	50	50	50	50	50	50	50	50	50	50	50	50	50	50	50
50	50	50	50		40	40	40		50	50	50		50	50	50	50		50	50	50	50	50	50	50	50	50	50	50	50	50	50	50	50	50
36	36	36	36		36	36	36		36	36	36		45	45	36	30		45	36	30	30	30	30	30	30	30	30	30	25	25	25	25	25	25
30	30	30	30		30	30	30		30	30	30			45	30	30		45	30	30	30	30	30	30	30	30	30	30	25	25	25	25	25	25
25	25	25	25		25	25	25		25	25	25			25	25	25		25	25	25	25	25	25	25	25	25	25	25	25	25	25	25	25	25
	25	25	25			25	25			25	25				25	25			25	25	25	25	25	25	25	25	25	25	25	25	25	25	25	25
	25	25	25			25	25			25	25				25	25			25	25	25	25	25	25	25	25	25	25	25	25	25	25	25	25

Cat.Nos	Page No	Pack
040 00		
048 68	36	1
090 00		
098 19	35	1
200 00		
202 09	46	1
11	-	1
13	-	1
15	-	1
17	-	1
20	-	1
21	-	1
22	-	1
23	-	1
24	-	1
25	-	1
28	-	1
29	-	1
203 09	47	1
10	-	1
13	-	1
17	-	1
18	-	1
20	-	1
21	-	1
22	-	1
23	-	1
24	-	1
25	-	1
28	-	1
29	-	1
60	-	1
65	-	1
66	-	1
70	-	1
71	-	1
72	-	1
73	-	1
74	-	1
206 08	48	1
11	-	1
13	-	1
15	-	1
17	-	1
20	-	1
21	-	1
22	-	1
23	-	1
24	-	1
30	-	1
61	-	1
63	51	1
68	48	1
69	51	1
70	48	1
71	51	1
72	48	1
73	51	1
80	48	1
81	51	1
83	-	1
207 49	51	1
50	-	1
59	-	1
61	-	1

Cat.Nos	Page No	Pack
207 64	51	1
69	-	1
90	-	1
91	-	1
94	-	1
95	-	1
96	-	1
97	-	1
208 05	48	1
10	-	1
13	-	1
17	-	1
20	-	1
22	-	1
23	-	1
24	-	1
30	-	1
34	-	1
209 05	49	1
10	-	1
13	-	1
17	-	1
20	-	1
21	-	1
22	-	1
24	-	1
30	-	1
34	-	1
60	-	1
65	51	1
70	49	1
72	-	1
80	-	1
84	-	1
210 00		
212 08	51	1
11	-	1
13	-	1
250 00		
253 28	34	1
29	-	1
30	-	1
31	-	1
32	-	1
41	-	1
42	-	1
45	-	1
46	-	1
47	-	1
48	-	1
49	-	1
52	-	1
53	-	1
54	-	1
55	-	1
56	-	1
66	-	1
69	-	1
70	-	1
71	-	1
72	-	1
73	-	1
98	45	1
254 01	34	1
03	-	1
04	-	1
05	-	1
07	-	1

Cat.Nos	Page No	Pack
254 09	34	1
10	-	1
11	-	1
13	-	1
15	-	1
16	-	1
17	-	1
19	-	1
21	-	1
22	-	1
23	-	1
40	35	1
41	-	1
42	-	1
43	-	1
45	-	1
46	-	1
47	-	1
48	-	1
50	-	1
51	-	1
52	-	1
53	-	1
55	-	1
56	-	1
57	-	1
58	-	1
255 21	37	1
22	-	1
23	-	1
24	-	1
25	-	1
32	-	1
33	-	1
34	-	1
35	-	1
36	-	1
37	-	1
38	-	1
39	-	1
40	-	1
42	-	1
43	-	1
44	-	1
45	-	1
52	-	1
53	-	1
54	-	1
55	-	1
57	-	1
58	-	1
59	-	1
60	-	1
86	45	1
87	-	1
88	-	1
89	-	1
256 01	37	1
02	-	1
03	-	1
05	-	1
06	-	1
07	-	1
10	-	1
11	-	1
14	-	1
15	-	1
26	38	1
27	-	1
28	-	1
30	-	1
31	-	1
32	-	1

Cat.Nos	Page No	Pack
256 35	38	1
36	-	1
39	-	1
40	-	1
43	-	1
44	-	1
47	-	1
48	-	1
257 02	40	1
03	-	1
04	-	1
06	-	1
07	-	1
08	-	1
10	-	1
11	-	1
12	-	1
14	-	1
15	-	1
16	-	1
26	-	1
27	-	1
28	-	1
30	-	1
31	-	1
32	-	1
34	-	1
35	-	1
36	-	1
38	-	1
39	-	1
40	-	1
94	45	1
95	-	1
96	-	1
97	-	1
98	-	1
99	-	1
258 02	40	1
03	-	1
04	-	1
09	-	1
10	-	1
11	-	1
16	-	1
17	-	1
18	-	1
23	-	1
24	-	1
25	-	1
260 00		
260 51	35	1
53	-	1
54	-	1
55	-	1
57	-	1
60	38	1
61	-	1
63	-	1
64	-	1
65	-	1
67	-	1
88	43	1
92	-	1
93	-	1
94	-	1
95	-	1
96	-	1
97	-	1
98	-	1

Cat.Nos	Page No	Pack
261 19	41	1
23	-	1
24	-	1
25	-	1
27	-	1
28	-	1
30	36	1
34	-	1
40	39	1
44	-	1
54	41	1
58	-	1
59	36	1
60	42	1
64	-	1
65	-	1
66	-	1
67	-	1
68	-	1
70	-	1
71	-	1
72	-	1
73	-	1
74	-	1
75	-	1
76	-	1
80	-	1
81	-	1
82	-	1
83	-	1
84	-	1
85	-	1
86	-	1
90	-	1
91	-	1
93	-	1
94	-	1
97	-	1
262 21	36	1
22	-	1
24	-	1
25	-	1
26	-	1
27	-	1
28	-	1
29	-	1
30	-	1
31	-	1
32	-	1
33	-	1
34	-	1
35	-	1
40	39	1
41	-	1
44	-	1
45	-	1
46	-	1
47	-	1
48	-	1
49	-	1
50	-	1
51	-	1
60	41	1
61	-	1
64	-	1
65	-	1
66	-	1
67	-	1
68	-	1
69	-	1
70	-	1
73	-	1
74	-	1

Cat.Nos	Page No	Pack
262 79	36	1
80	-	1
81	39	1
82	-	1
83	41	1
84	-	1
92	36	1
93	-	1
94	-	1
263 31	36	1
32	-	1
43	35	1
50	39	1
51	-	1
52	-	1
68	-	1
80	41	1
81	-	1
82	-	1
83	-	1
99	35	1
264 03	35	1
04	39	1
05	41	1
08	35	1
09	39	1
10	41	1
265 27	36	1
28	-	1
29	35	1
30	-	1
31	-	1
32	-	1
33	-	1
34	-	1
35	-	1
36	-	1
37	-	1
38	-	1
39	-	1
45	-	1
46	-	1
47	-	1
50	39	1
51	-	1
52	-	1
53	-	1
54	-	1
55	-	1
56	-	1
57	-	1
58	-	1
59	-	1
60	-	1
66	-	1
67	-	1
68	-	1
74	35	1
75	-	1
76	-	1
78	-	1
80	41	1
82	-	1
83	-	1
84	-	1
85	-	1
370 00		
371 92	43	25

420 000

Cat.Nos	Page No	Pack
420 000	26	1
001	-	1
002	-	1
003	-	1
004	-	1
005	-	1
006	-	1
007	-	1
010	-	1
011	-	1
012	-	1
013	-	1
014	-	1
015	-	1
016	-	1
017	-	1
030	-	1
031	-	1
032	-	1
033	-	1
034	-	1
035	-	1
036	-	1
037	-	1
040	-	1
041	-	1
042	-	1
043	-	1
044	-	1
045	-	1
046	-	1
047	-	1
050	-	1
051	-	1
052	-	1
053	-	1
054	-	1
055	-	1
056	-	1
057	-	1
070	-	1
071	-	1
072	-	1
073	-	1
074	-	1
075	-	1
076	-	1
077	-	1
080	-	1
081	-	1
082	-	1
083	-	1
084	-	1
085	-	1
086	-	1
087	-	1
090	-	1
091	-	1
092	-	1
093	-	1
094	-	1
095	-	1
096	-	1
097	-	1
420 110	26	1
111	-	1
112	-	1
113	-	1
114	-	1
115	-	1
116	-	1
117	--	1

Cat.Nos	Page No	Pack
420 120	26	1
121	-	1
122	-	1
123	-	1
124	-	1
125	-	1
126	-	1
127	-	1
130	-	1
131	-	1
132	-	1
133	-	1
134	-	1
135	-	1
136	-	1
137	-	1
150	-	1
151	-	1
152	-	1
153	-	1
154	-	1
155	-	1
156	-	1
157	-	1
197	45	1
198	-	1
199	-	1
420 205	28	1
207	-	1
208	-	1
209	-	1
215	-	1
217	-	1
218	-	1
219	-	1
225	-	1
227	-	1
228	-	1
229	-	1
235	-	1
237	-	1
238	-	1
239	-	1
245	-	1
247	-	1
248	-	1
249	-	1
255	-	1
257	-	1
258	-	1
259	-	1
265	-	1
267	-	1
268	-	1
269	-	1
275	-	1
277	-	1
278	-	1
279	-	1
285	-	1
287	-	1
288	-	1
289	-	1
298	45	1
299	-	1
420 300	45	1
302	29	1
305	-	1
307	-	1
309	-	1
312	-	1
315	-	1
317	-	1

Cat.Nos	Page No	Pack
420 319	29	1
322	-	1
325	-	1
327	-	1
329	-	1
332	-	1
335	-	1
337	-	1
339	-	1
342	-	1
345	-	1
347	-	1
349	-	1
352	-	1
355	-	1
357	-	1
359	-	1
362	-	1
365	-	1
367	-	1
369	-	1
372	-	1
375	-	1
377	-	1
379	-	1
382	-	1
385	-	1
387	-	1
389	-	1
420 402	30	1
405	-	1
407	-	1
409	-	1
412	-	1
415	-	1
417	-	1
419	-	1
422	-	1
425	-	1
427	-	1
429	-	1
432	-	1
435	-	1
437	-	1
439	-	1
442	-	1
445	-	1
447	-	1
449	-	1
452	-	1
455	-	1
457	-	1
459	-	1
462	-	1
465	-	1
467	-	1
469	-	1
472	-	1
475	-	1
477	-	1
479	-	1
482	-	1
485	-	1
487	-	1
489	-	1
420 502	31	1
505	-	1
507	-	1
509	-	1
512	-	1
515	-	1
517	-	1

Cat.Nos	Page No	Pack
420 519	31	1
522	-	1
525	-	1
527	-	1
529	-	1
532	-	1
535	-	1
537	-	1
539	-	1
542	-	1
545	-	1
547	-	1
549	-	1
552	-	1
555	-	1
557	-	1
558	48	1
559	31	1
420 605	28	1
607	-	1
608	-	1
609	-	1
615	-	1
617	-	1
618	-	1
619	-	1
625	-	1
627	-	1
628	-	1
629	-	1
635	29	1
637	-	1
638	-	1
639	-	1
645	-	1
647	-	1
648	-	1
649	-	1
655	-	1
657	-	1
658	-	1
659	-	1
665	30	1
667	-	1
668	-	1
669	-	1
675	-	1
677	-	1
678	-	1
679	-	1
685	-	1
687	-	1
688	-	1
689	-	1
692	31	1
695	-	1
697	-	1
699	-	1
420 702	31	1
705	-	1
707	-	1
709	-	1
710	44	1
711	-	1
712	-	1
713	-	1
714	-	1
715	-	1
716	-	1
717	-	1
718	-	1
719	-	1

Cat.Nos	Page No	Pack
420 720	44	1
721	-	1
722	-	1
723	-	1
724	-	1
725	-	1
726	-	1
727	-	1
728	-	1
729	-	1

421 000

Cat.Nos	Page No	Pack
421 000	32	1
001	-	1
002	-	1
003	-	1
004	-	1
005	-	1
006	-	1
007	-	1
008	-	1
009	-	1
010	-	1
011	-	1
012	-	1
013	-	1
014	-	1
015	-	1
016	-	1
017	-	1
018	-	1
019	-	1
020	-	1
021	-	1
022	-	1
023	-	1
024	-	1
025	-	1
026	27	1
027	-	1
028	-	1
029	-	1
030	31	1
031	-	1

Cat.Nos	Page No	Pack
421 032	27	1
033	-	1
034	31	1
035	-	1
036	27	1
037	-	1
038	31	1
039	-	1
040	27	1
041	-	1
042	31	1
043	-	1
044	27	1
045	-	1
046	-	1
047	-	1
048	32	1
049	-	1
050	27	1
051	-	1
052	31	1
053	-	1
054	27	1
055	-	1
056	31	1
057	-	1
058	32	1
059	-	1
060	-	1
061	-	1
062	-	1
063	-	1
064	-	1
065	-	1
066	-	1
067	-	1
068	27	1
069	31	1
070	27	1
071	-	1
072	31	1
073	27	1
074	31	1
075	32	1

In accordance with its policy of continuous improvement, the Company reserves the right to change specifications and designs without notice
All illustrations, descriptions, dimensions and weights in this catalogue are for guidance and cannot be held binding on the Company

EXB 10128 - October 2011

World Headquarters
and International Department
128, av. du Maréchal-de-Lattre-de Tassigny
87045 Limoges Cedex - France
☎ : + 33 (0) 5 55 06 87 87
Fax : + 33 (0) 5 55 06 74 55
www.legrand.com